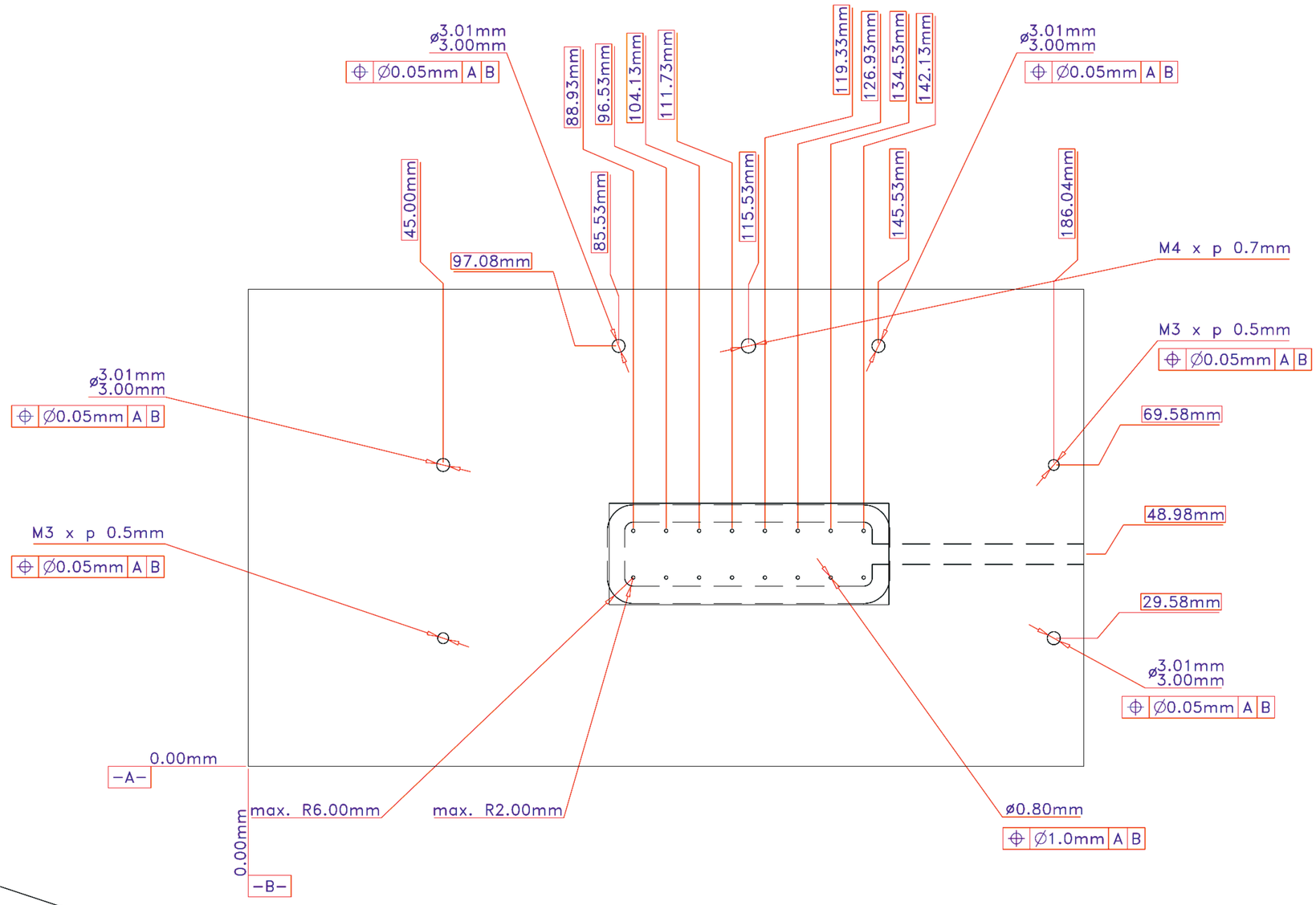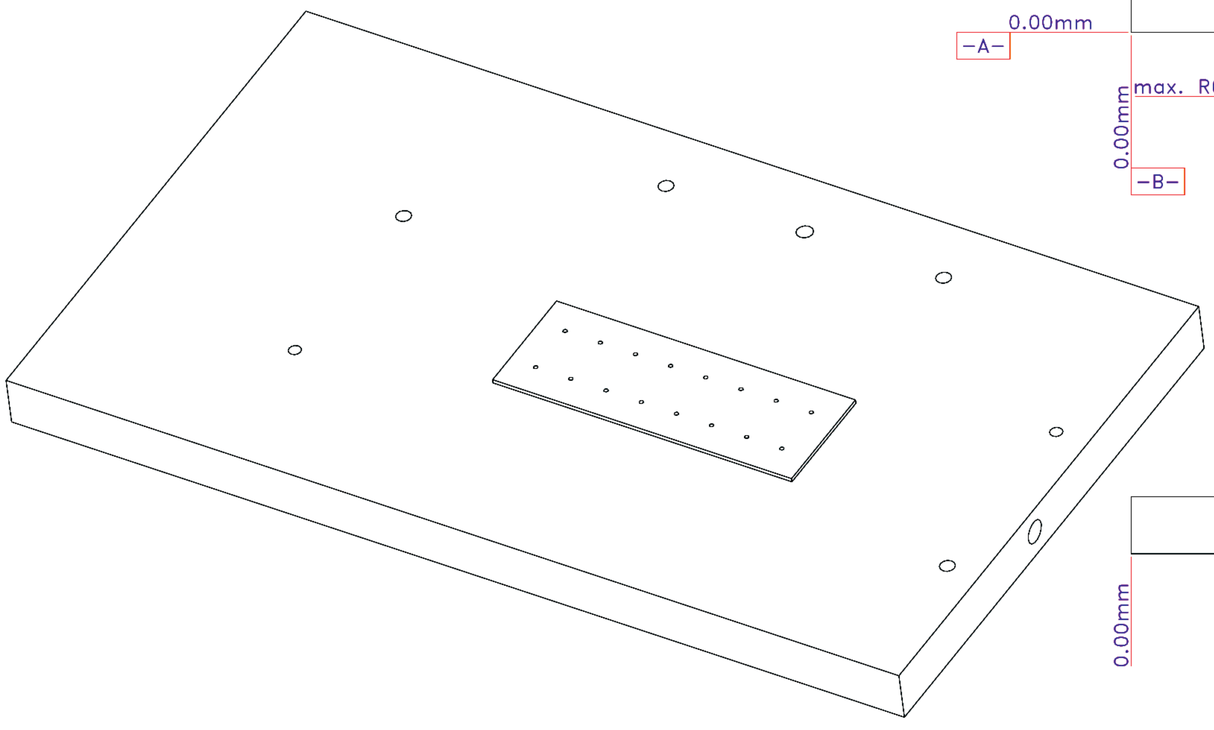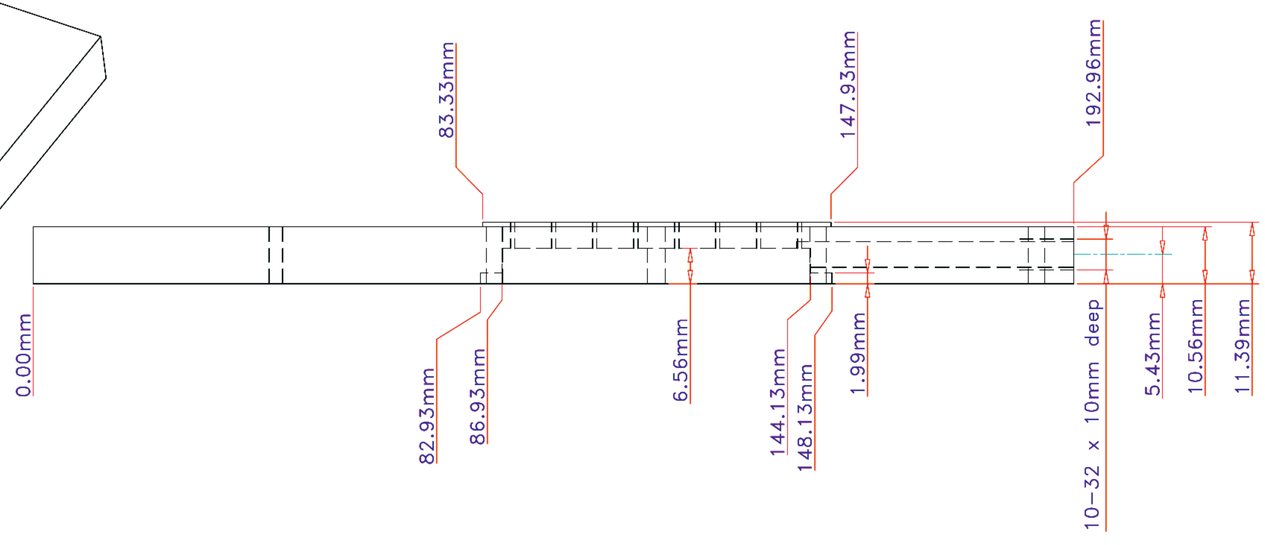UNLESS OTHERWISE SPECIFIED: DIMENSIONS ARE IN mm [inch] TOLERANCES DECIMALS X ± .25 mm .X ± .13 mm .XX ± .05 mm .XXX ± .03 mm ANGULAR ± 0.5° DO NOT SCALE DRAWING	Lawrence Berkeley National Laboratory		
DATE NEEDED NA	ATLAS Pixal Assembly Fixtures Hybird Frame Vacuum Chuck Base		
SURFACE TREATMENT NA	DWG NO. ag0487	REV –	REV DATE 5 Jun 03
PART / NO. REQ'D	DRAWN BY Fred Goozen	PHONE 510 486 6924	
A 1	START DATE 5 Jun 03	FAX 510 486 7111	
0 00	LAST CHANGED 5 Jun 03	E-MAIL FRGoozen@lbl.gov	
0 00	MATERIAL Aluminum –	ACCOUNT P 1 AS 33