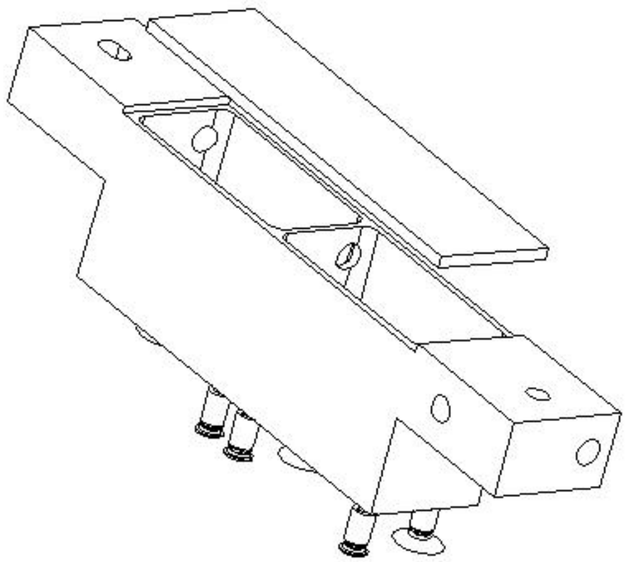

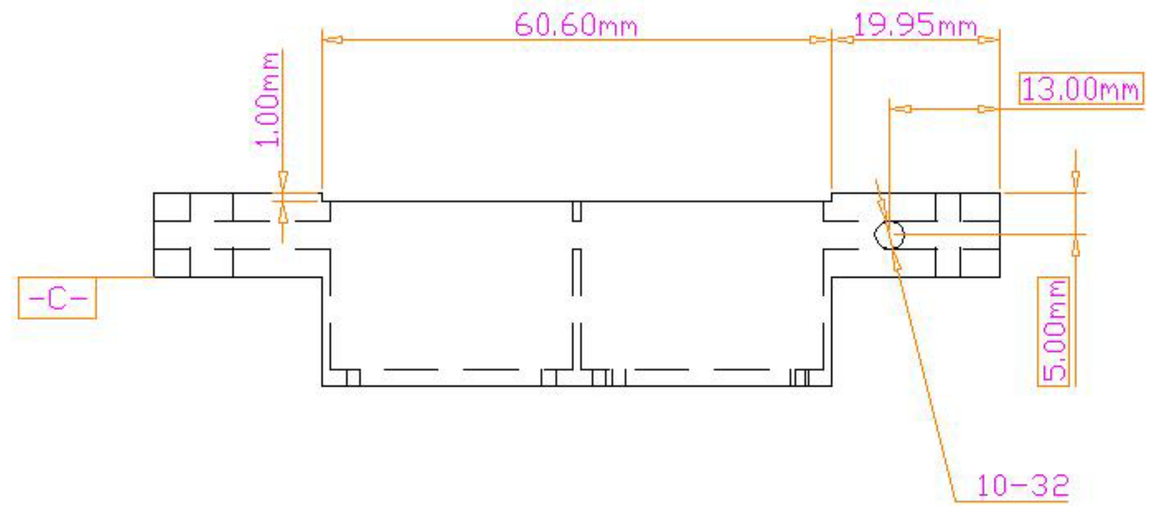

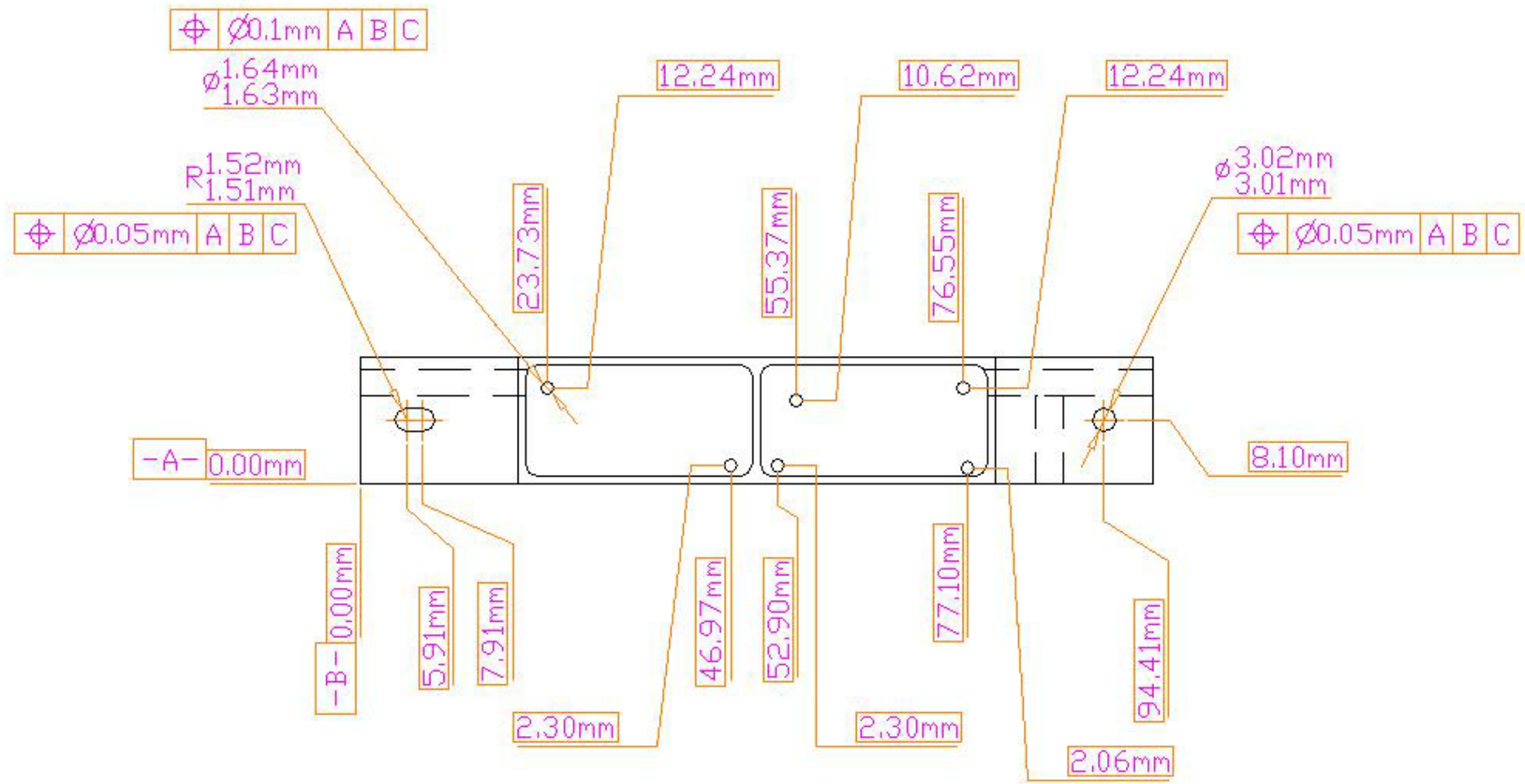

UNLESS OTHERWISE SPECIFIED: DIMENSIONS ARE IN mm [Inch] TOLERANCES DECIMALS: X ± .25 mm, .X ± .13 mm, .XX ± .05 mm, .XXX ± .03 mm; ANGULAR ± 0.5° DO NOT SCALE DRAWING	Lawrence Berkeley National Laboratory ATLAS Pixal Assembly Fixtures Detector Vacuum Chuck Mod.
DATE NEEDED: NA	
SURFACE TREATMENT: NA	DWG NO. ag0480 · REV — · REV DATE 3 Jun 03
PART / NO. REQ'D	DRAWN BY: Fred Goozen · PHONE: 510 486 6924
480 / 3	START DATE: 12 May 03 · FAX: 510 486 7111
0 / 00	LAST CHANGED: 3 Jun 03 · E-MAIL: FRGoozen@lbl.gov
0 / 00	MATERIAL: Aluminum — · ACCOUNT: P 1 AS 33