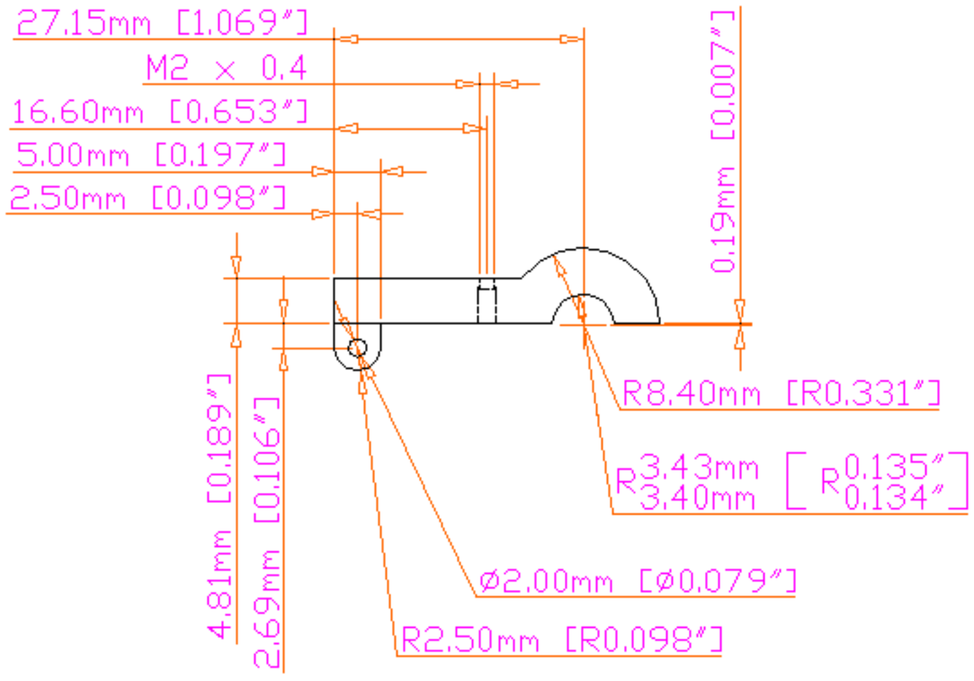

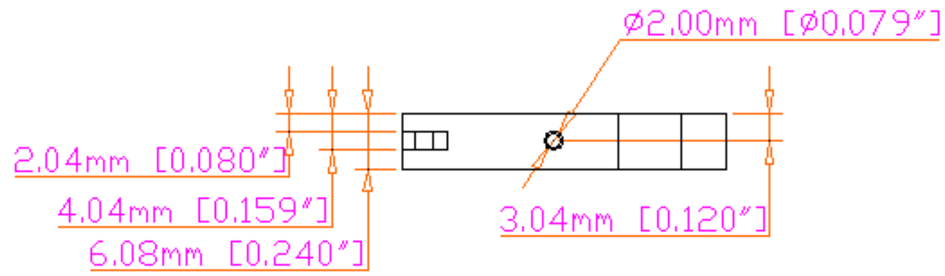

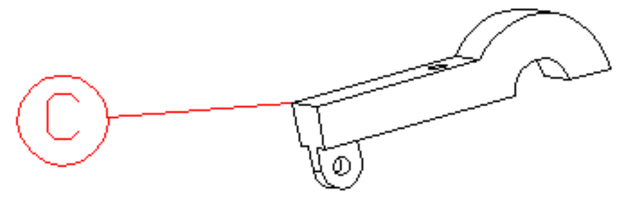

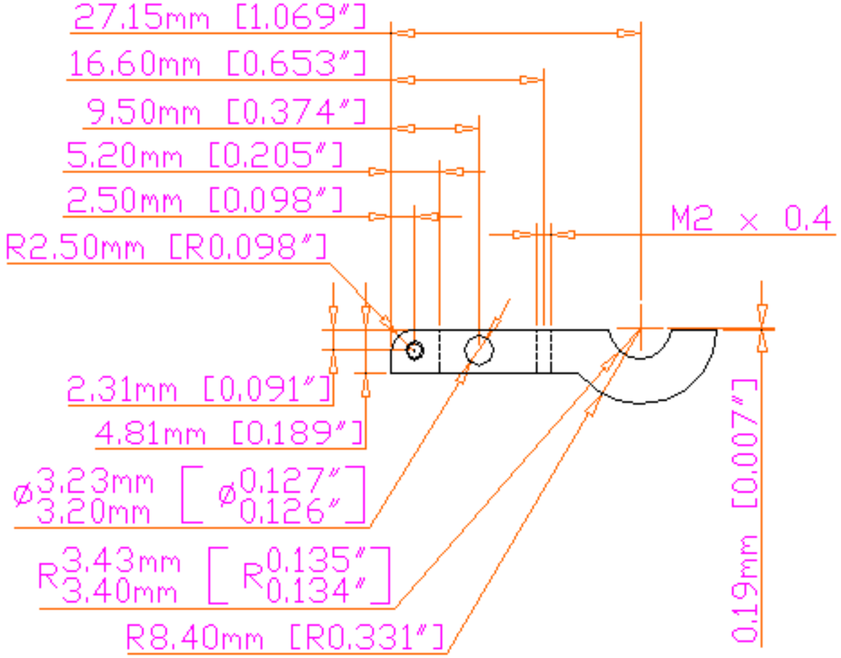

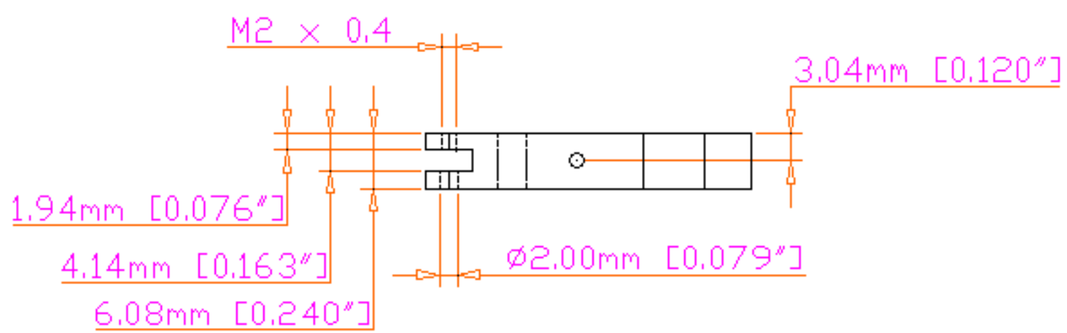

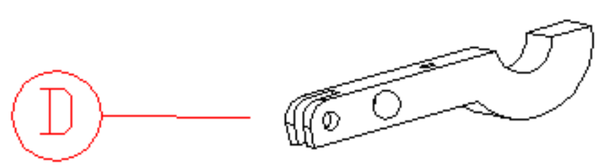

UNLESS OTHERWISE SPECIFIED DIMENSIONS ARE IN mm [inch] TOLERANCES DECIMALS X ± .25 mm ANGULAR ± 0.5° X ± .13 mm XX ± .05 mm .XXX ± .03 mm DO NOT SCALE DRAWING	Lawrence Berkeley National Laboratory		
FINISH NA	ATLAS Proposed Laser Lock type connector Wrench Supply / Return End Part A		
MATERIAL Clean	MFR NO. ag0419	REV —	REV DATE 06 Dec 01
PART / NO. REQ'D	DRAWN BY Fred Gaozen	PHONE 510 486 6824	
C 2	SENT DATE 19 Nov 01	FAX 510 486 7111	
D 2	LAST CHANGED 06 Dec 01	E-MAIL FRGaozen@lbl.gov	
0 00	MATERIAL aluminum 6061-T6	ACCOUNT P-1-AP-31	