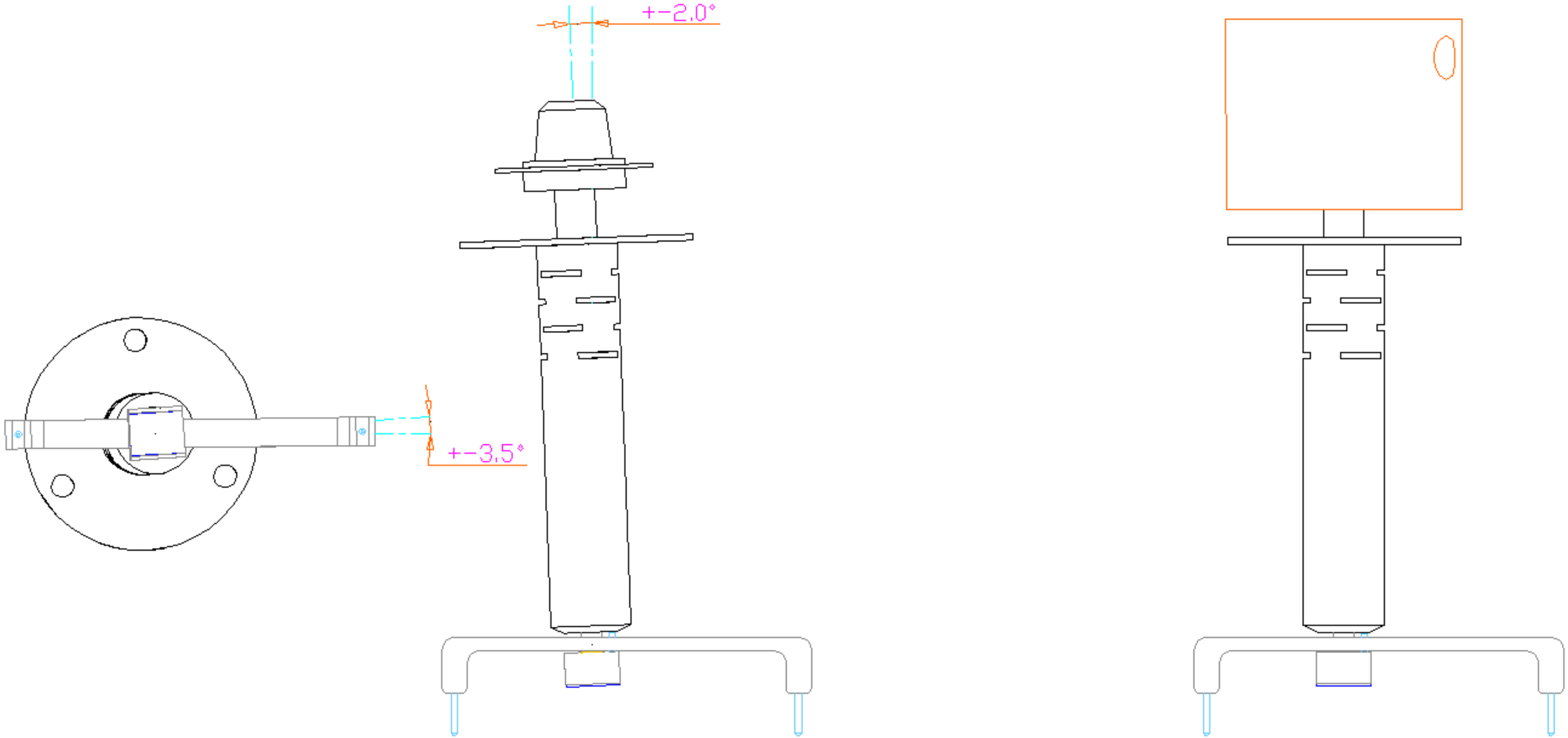
+-2,0°
+-3,5°