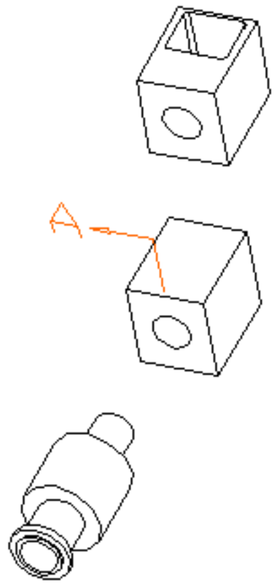

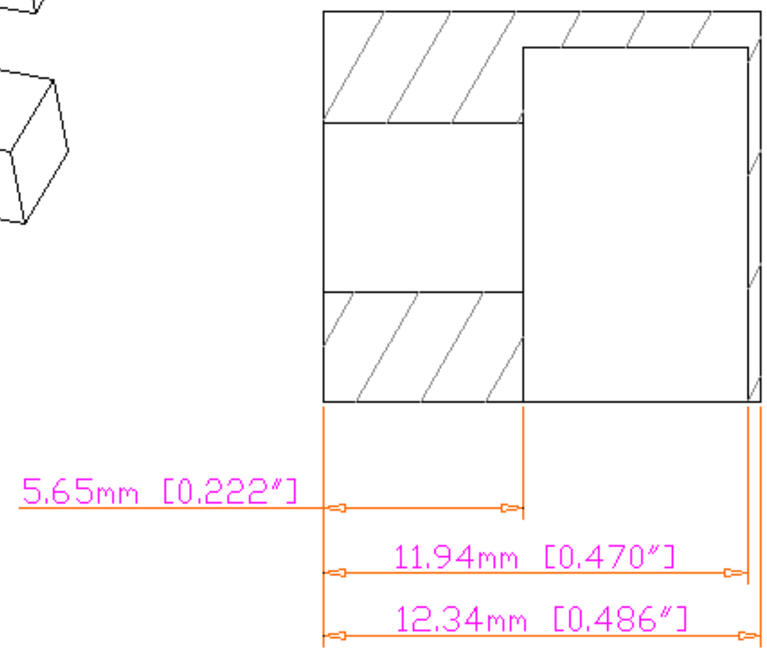

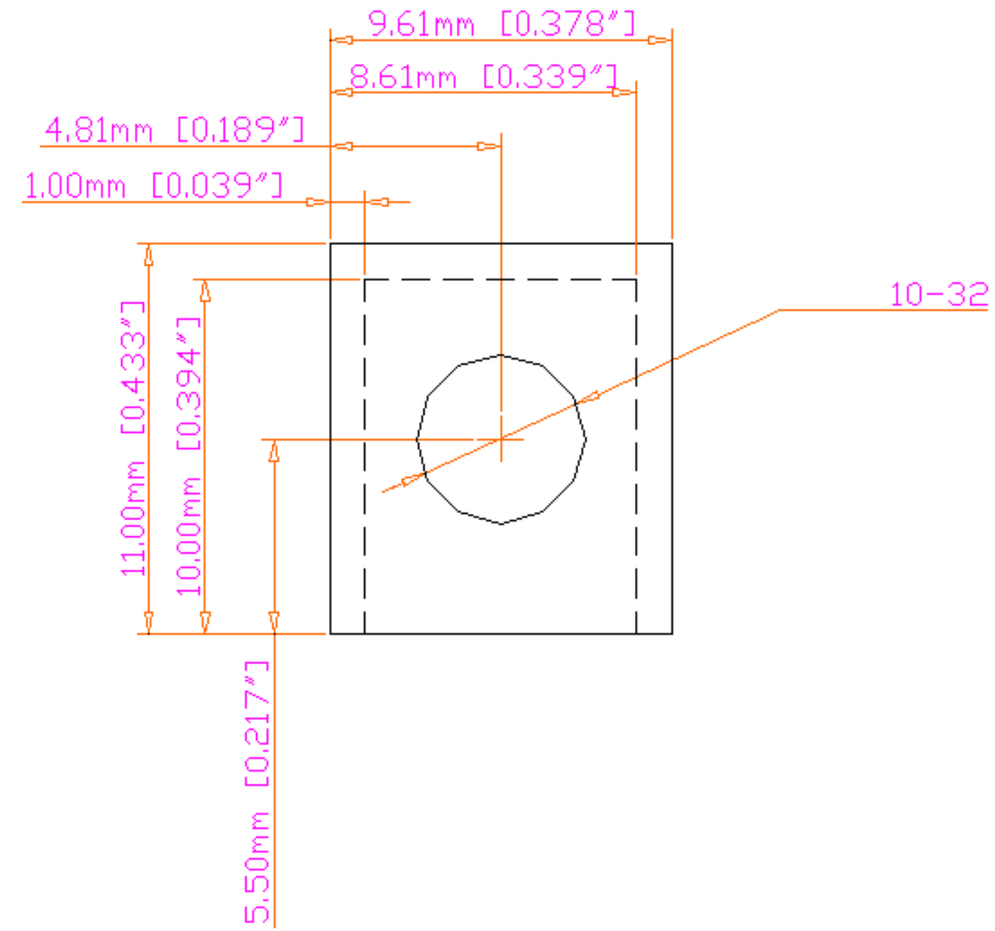

UNLESS OTHERWISE SPECIFIED: DIMENSIONS ARE IN mm [inch] TOLERANCES DECIMALS: X ± .25 mm; .X ± .13 mm; .XX ± .05 mm; .XXX ± .03 mm ANGULAR ± 0.5° DO NOT SCALE DRAWING	Lawrence Berkeley National Laboratory ATLAS SCT Detector Module Multi Purpose Fixture Chip Chuck Vacuum Connection
DATE NEEDED: NA	
SURFACE TREATMENT: hard anodize black	DWG NO. ag0408 · REV — · REV DATE 24 Oct 01
PART / NO. REQ'D	DRAWN BY: Fred Goozen · PHONE: 510 486 6924
408 / 1	START DATE: 16 Oct 01 · FAX: 510 486 7111
0 / 00	LAST CHANGED: 24 Oct 01 · E-MAIL: FRGoozen@lbl.gov
0 / 00	MATERIAL: aluminum 6061-T6 · ACCOUNT: P-1-AP-31