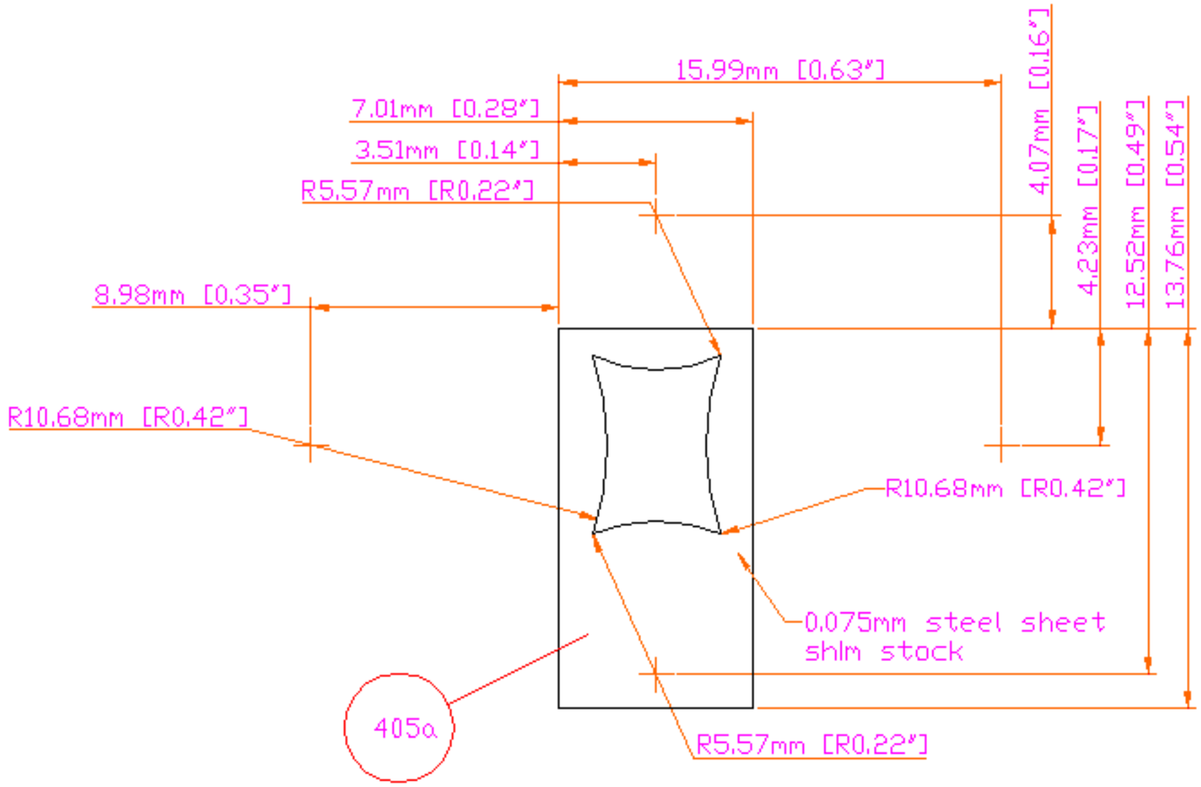

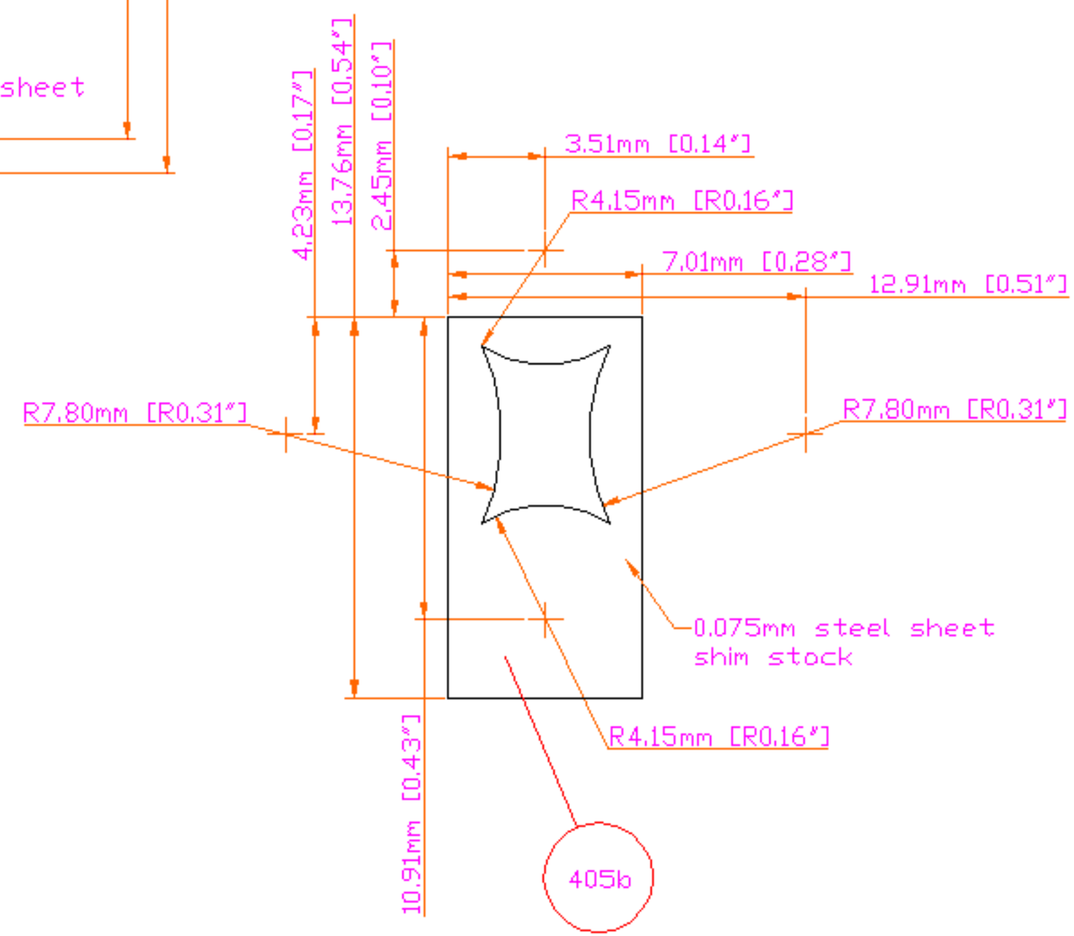

UNLESS OTHERWISE SPECIFIED: DIMENSIONS ARE IN mm [Inch] TOLERANCES DECIMALS: X ± .25 mm; .X ± .13 mm; .XX ± .05 mm; .XXX ± .03 mm ANGULAR ± 0.5° DO NOT SCALE DRAWING	Lawrence Berkeley National Laboratory ATLAS SCT Detector Module Multi Purpose Fixture Glue Mask		
DATE NEEDED: NA			
SURFACE TREATMENT: Nickel plate	DWG NO. ag0405	REV A	REV DATE 3 Dec 01
PART / NO. REQ'D	DRAWN BY Fred Goozen		PHONE 510 486 6924
405a 5	START DATE 10 Oct 01		FAX 510 486 7111
405b 5	LAST CHANGED 3 Dec 01		E-MAIL FRGoozen@lbl.gov
0 00	MATERIAL Steel –		ACCOUNT P-1-AP-31