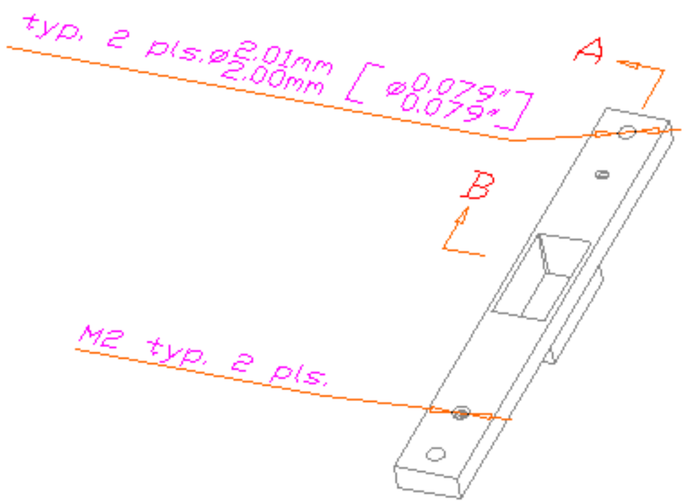

section A

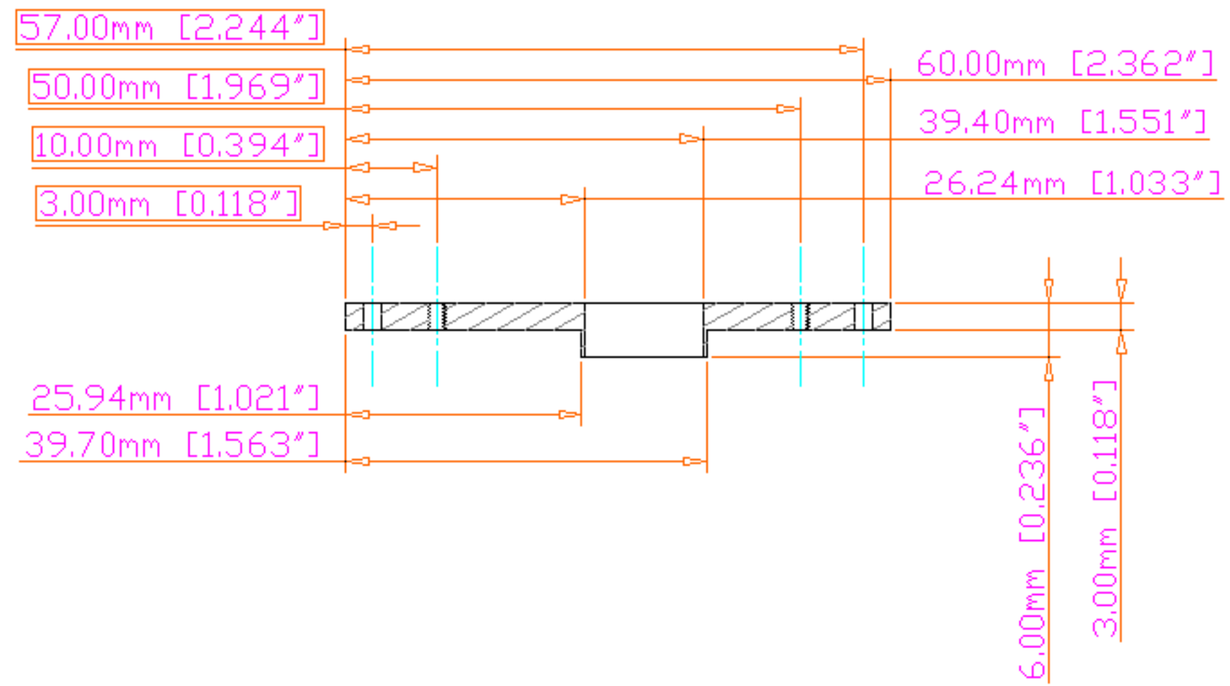

section B

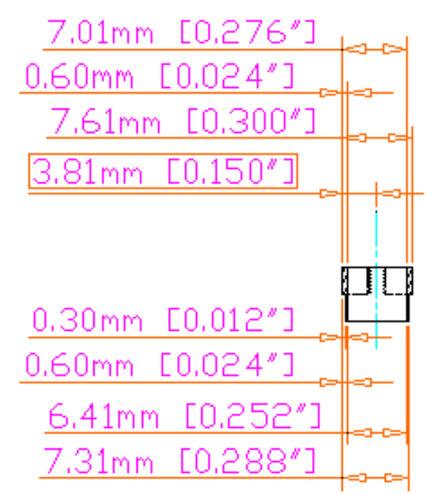

UNLESS OTHERWISE SPECIFIED: DIMENSIONS ARE IN mm [inch] TOLERANCES DECIMALS X ± .25 mm .X ± .13 mm .XX ± .05 mm .XXX ± .03 mm ANGULAR ± 0.5° DO NOT SCALE DRAWING	Lawrence Berkeley National Laboratory ATLAS SCT Detector Module Multi Purpose Fixture Glue Mask Body		
DATE NEEDED NA			
SURFACE TREATMENT hard anodize black	DWG NO. ag0403	REV —	REV DATE 10 Oct 01
PART / NO. REQ'D	DRAWN BY Fred Goozen		PHONE 510 486 6924
403 / 1	START DATE 10 Oct 01		FAX 510 486 7111
0 / 00	LAST CHANGED 10 Oct 01		E-MAIL FRGoozen@lbl.gov
0 / 00	MATERIAL Aluminum Tooling Plate		ACCOUNT P-1-AP-31