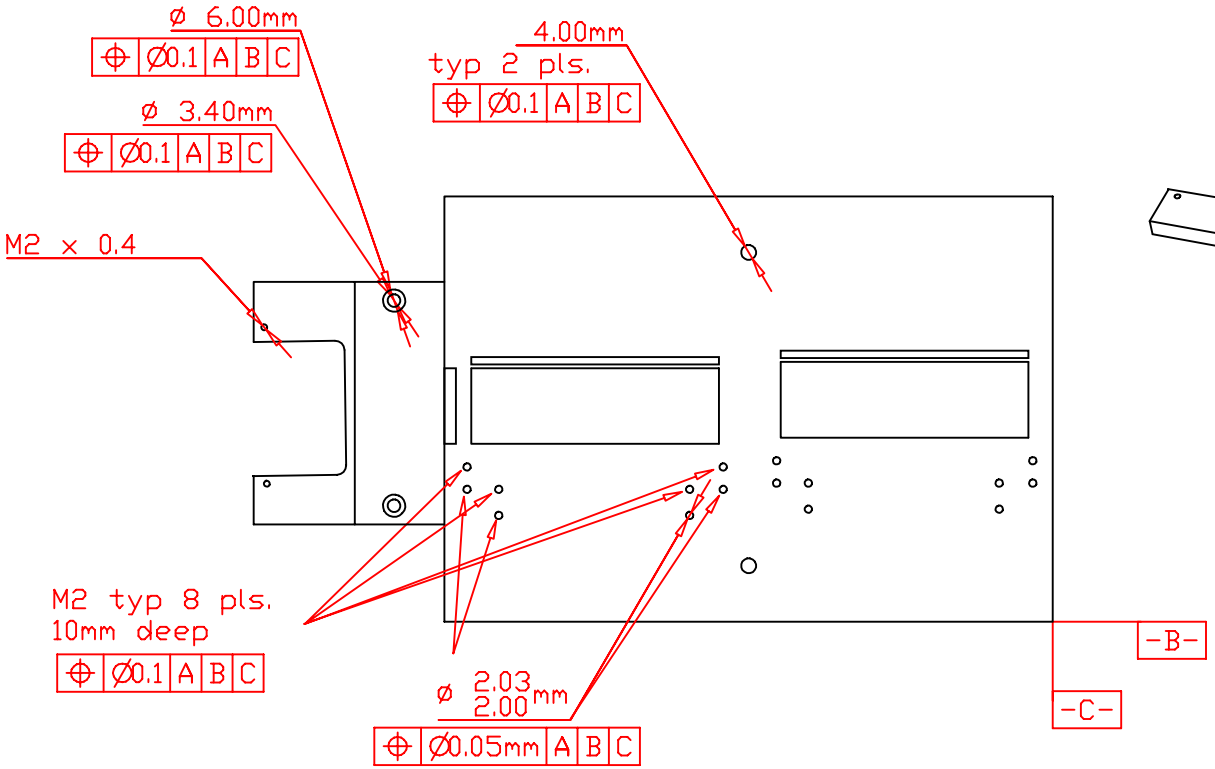

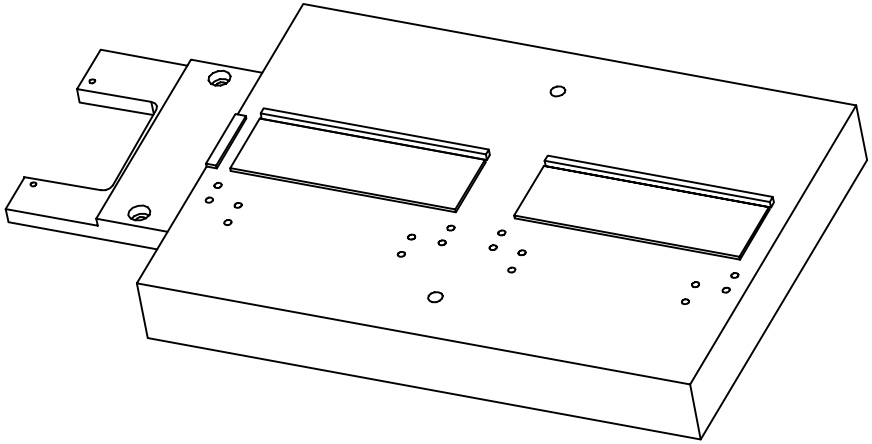

UNLESS OTHERWISE SPECIFIED: DIMENSIONS ARE IN mm [inch] TOLERANCES DECIMALS X ± .25 mm .X ± .13 mm .XX ± .05 mm .XXX ± .03 mm ANGULAR ± 0.5° DO NOT SCALE DRAWING	Lawrence Berkeley National Laboratory		
DATE NEEDED NA	ATLAS, SCT Multi Purpose Fixture Base #2		
SURFACE TREATMENT Hard Anodize Black	DWG NO. ag0400 #3	REV A	REV DATE 18 Feb 02
PART / NO. REQ'D	DRAWN BY Fred Goozen		PHONE 510 486 6924
400 14	START DATE 9 Oct 01		FAX 510 486 7111
0 00	LAST CHANGED 18 Feb 02		E-MAIL FRGoozen@lbl.gov
0 00	MATERIAL Aluminum Tooling Plate		ACCOUNT P 1 AS 33