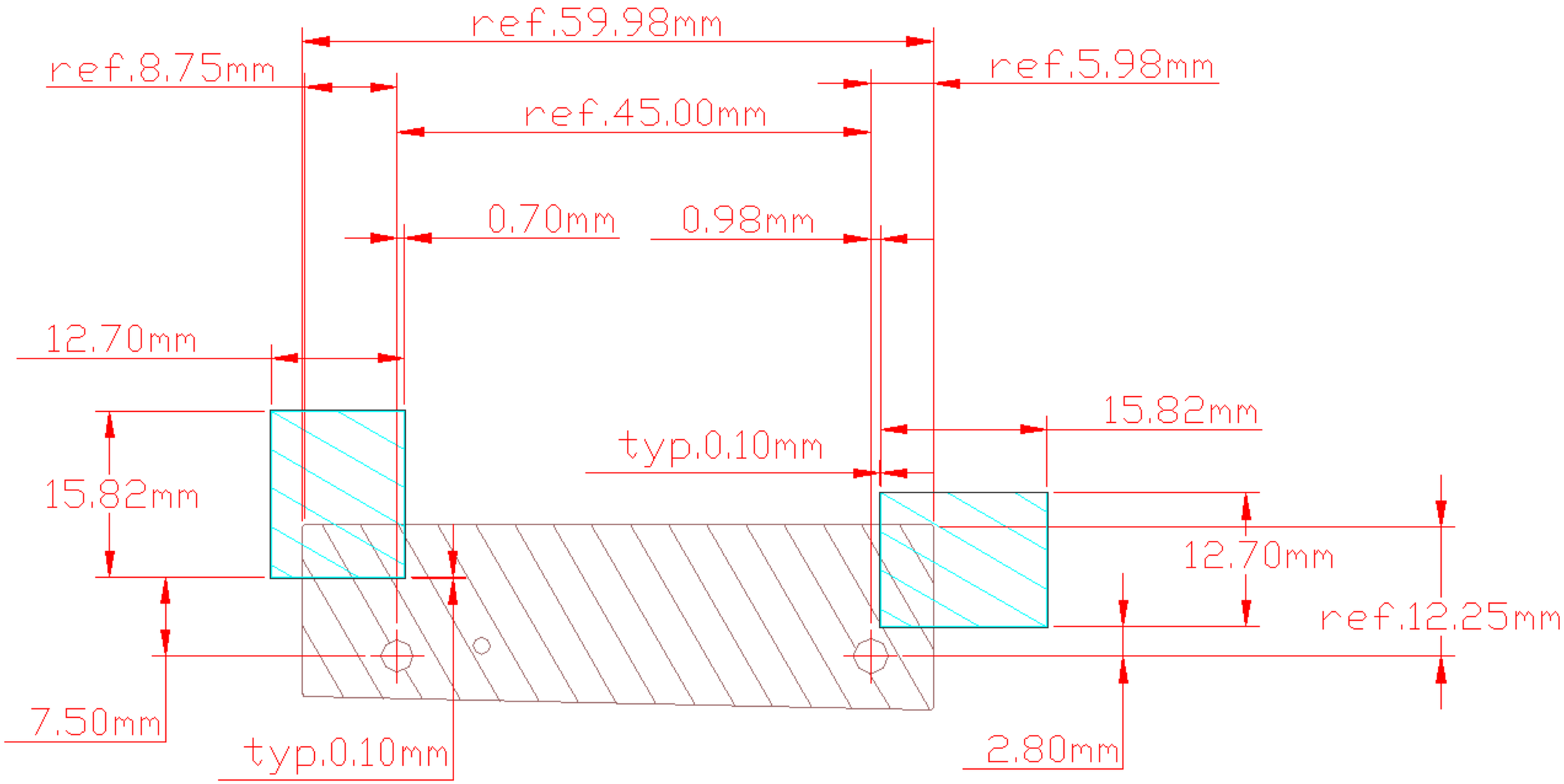
ref.59.98mm
ref.8.75mm
ref.5.98mm
ref.45.00mm
0.70mm
0.98mm
12.70mm
15.82mm
typ.0.10mm
15.82mm
12.70mm
ref.12.25mm
7.50mm
typ.0.10mm
2.80mm