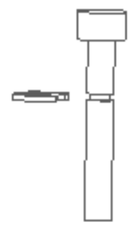

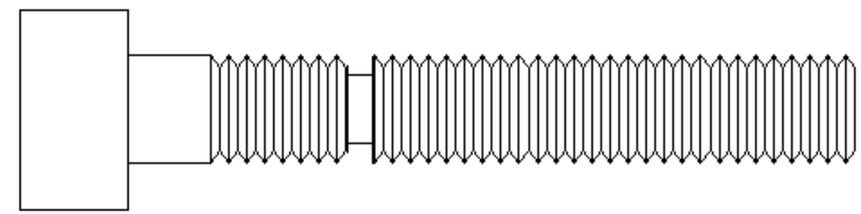

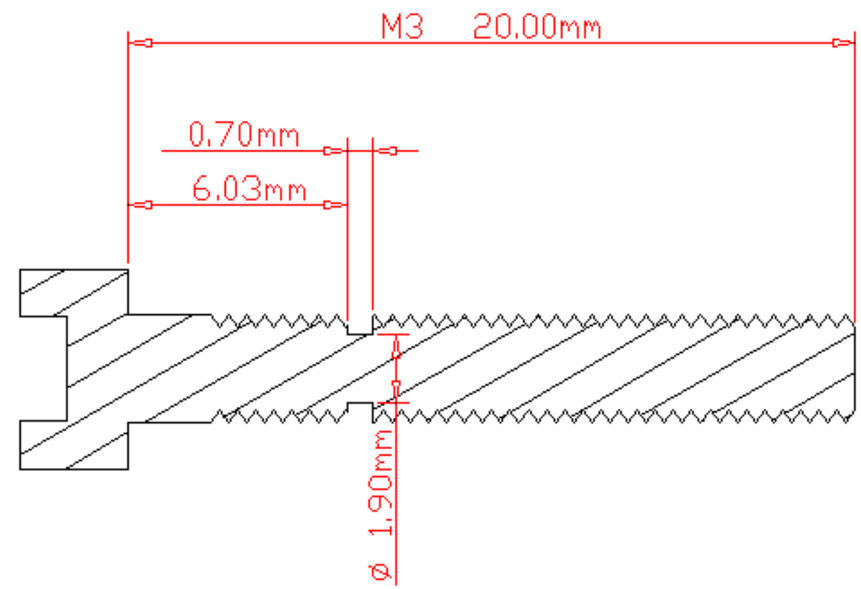

UNLESS OTHERWISE SPECIFIED: DIMENSIONS ARE IN mm [inch] TOLERANCES DECIMALS X ± .25 mm .X ± .13 mm .XX ± .05 mm .XXX ± .03 mm ANGULAR ± 0.5° DO NOT SCALE DRAWING	Lawrence Berkeley National Laboratory		
DATE NEEDED NA	ATLAS SCT Detector Module Pickup Tool Clamp Screw		
SURFACE TREATMENT none	DWG NO. ag0397	REV –	REV DATE 08 Oct 01
PART / NO. REQ'D	DRAWN BY Fred Goozen		PHONE 510 486 6924
397 / 4	START DATE 08 Oct 01		FAX 510 486 7111
0 / 00	LAST CHANGED 08 Oct 01		E-MAIL FRGoozen@lbl.gov
0 / 00	MATERIAL SS		ACCOUNT P-1-AP-31