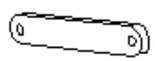

4 X

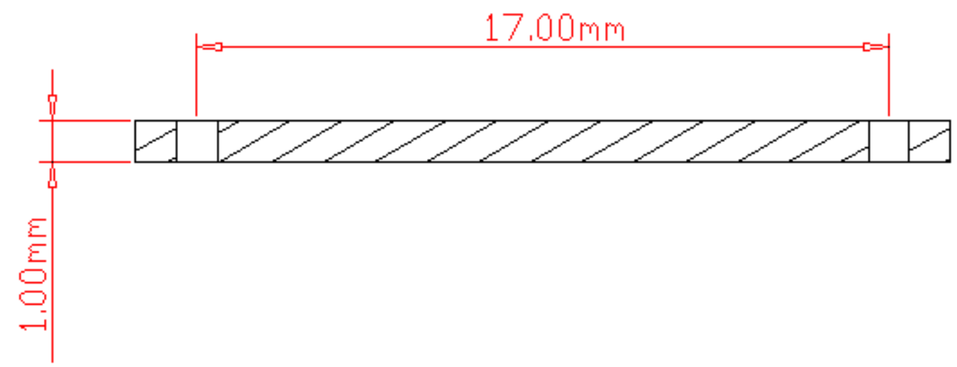

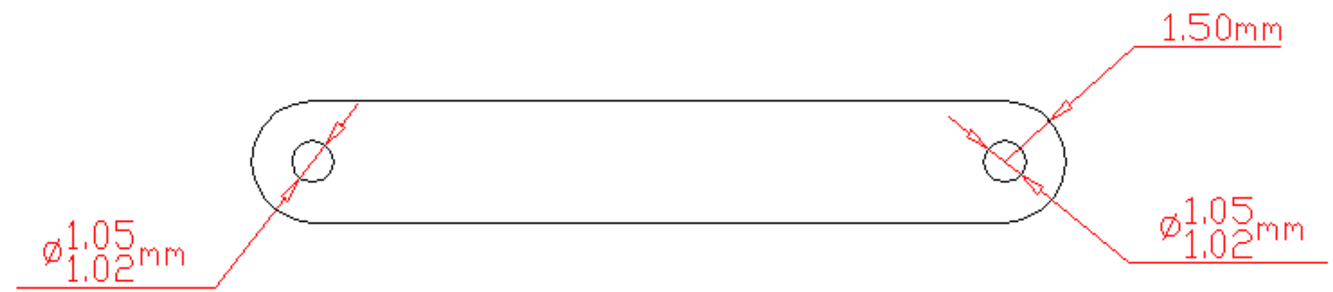

UNLESS OTHERWISE SPECIFIED: DIMENSIONS ARE IN mm [Inch] TOLERANCES DECIMALS X ± .25 mm .X ± .13 mm .XX ± .05 mm .XXX ± .03 mm ANGULAR ± 0.5° DO NOT SCALE DRAWING	Lawrence Berkeley National Laboratory
DATE NEEDED NA	ATLAS SCT Detector Module Pickup Tool Link Bar
SURFACE TREATMENT none	DWG NO. ag0395 / REV – / REV DATE 03 Oct 01
PART / NO. REQ'D	DRAWN BY Fred Goozen / PHONE 510 486 6924
395 / 2	START DATE 03 Oct 01 / FAX 510 486 7111
0 / 00	LAST CHANGED 03 Oct 01 / E-MAIL FRGoozen@lbl.gov
0 / 00	MATERIAL 6061-T6 / ACCOUNT P-1-AP-31