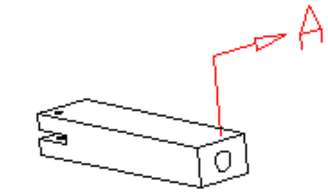

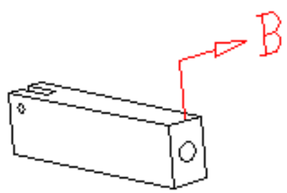

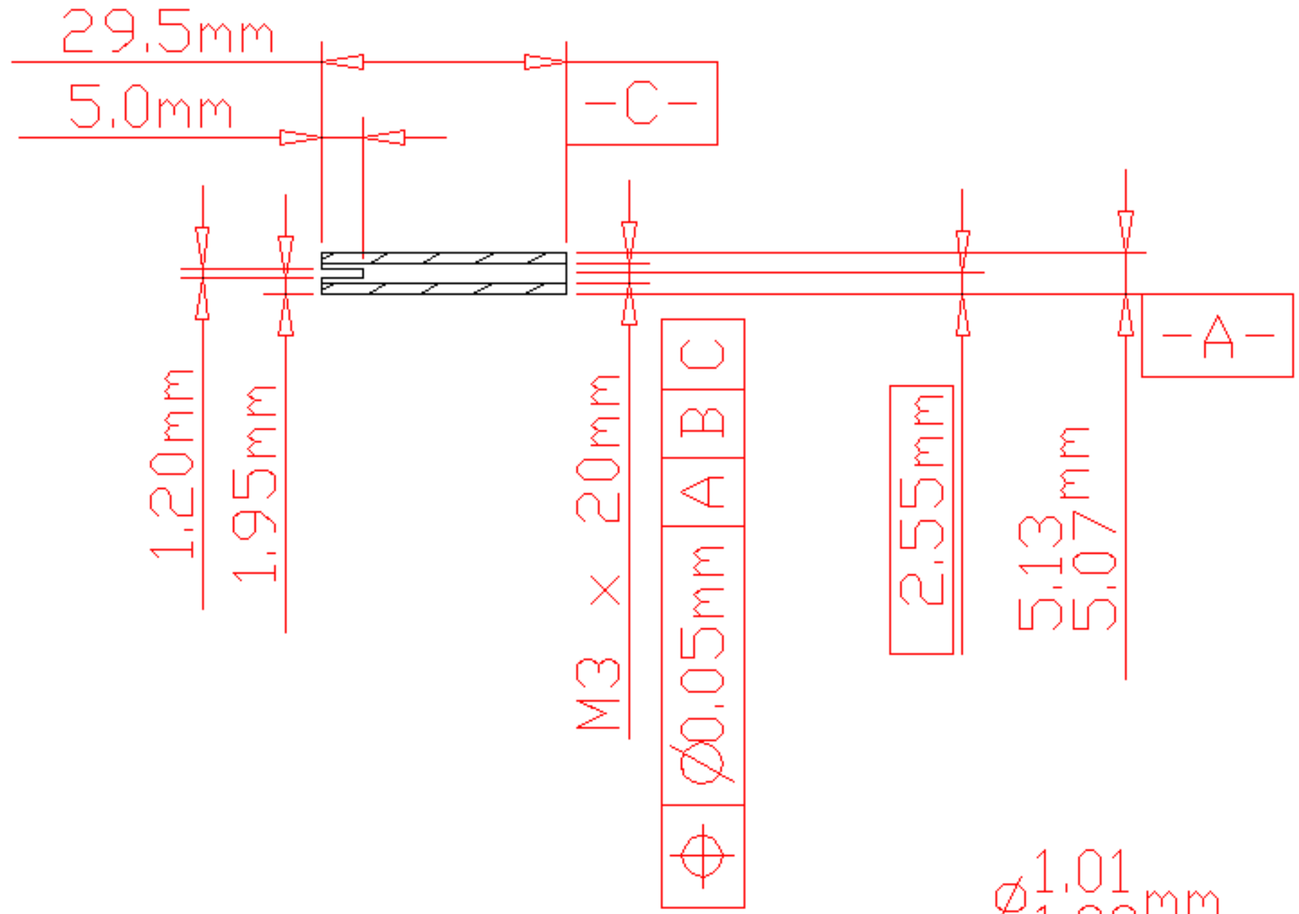

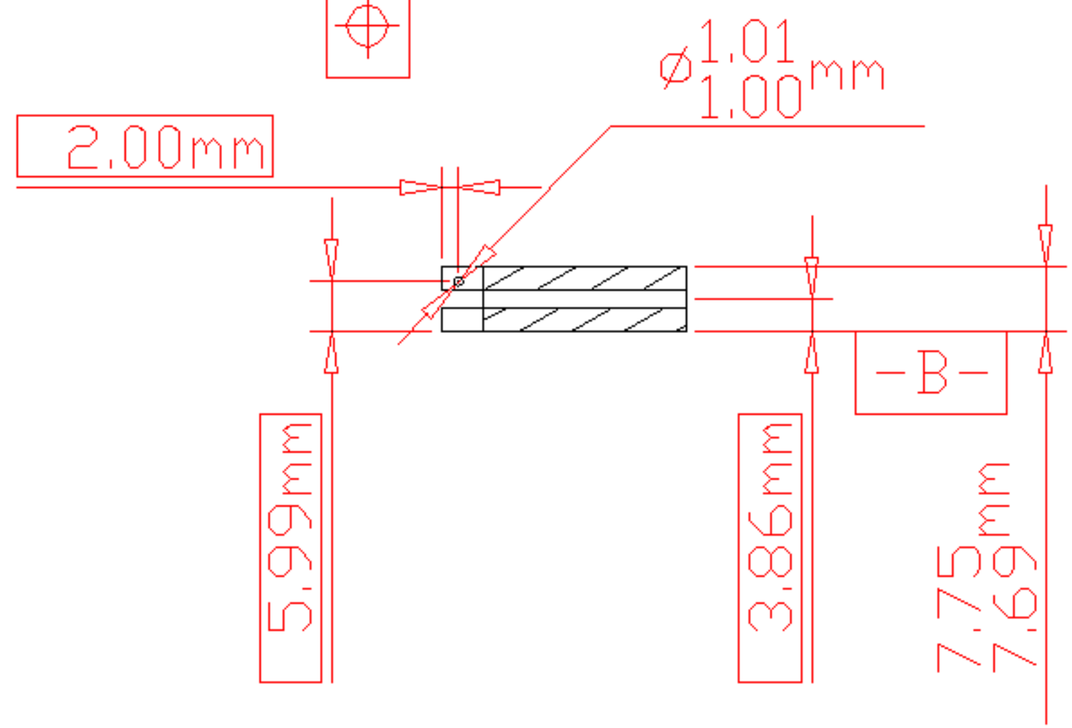

UNLESS OTHERWISE SPECIFIED: DIMENSIONS ARE IN mm [inch] TOLERANCES DECIMALS .X ± .20 mm .XX ± .13 mm .XXX ± .05 mm .XXXX ± .03 mm ANGULAR ± 0.5° DO NOT SCALE DRAWING	Lawrence Berkeley National Laboratory		
DATE NEEDED NA	ATLAS SCT Detector Module Pickup Tool Slide Block		
SURFACE TREATMENT Hard anodize Black	DWG NO. ag0394	REV –	REV DATE 03 Oct 01
PART / NO. REQ'D	DRAWN BY Fred Goozen	PHONE 510 486 6924	
394 / 2	START DATE 03 Oct 01	FAX 510 486 7111	
0 / 00	LAST CHANGED 03 Oct 01	E-MAIL FRGoozen@lbl.gov	
0 / 00	MATERIAL Aluminum Tooling Plate	ACCOUNT P-1-AP-31	