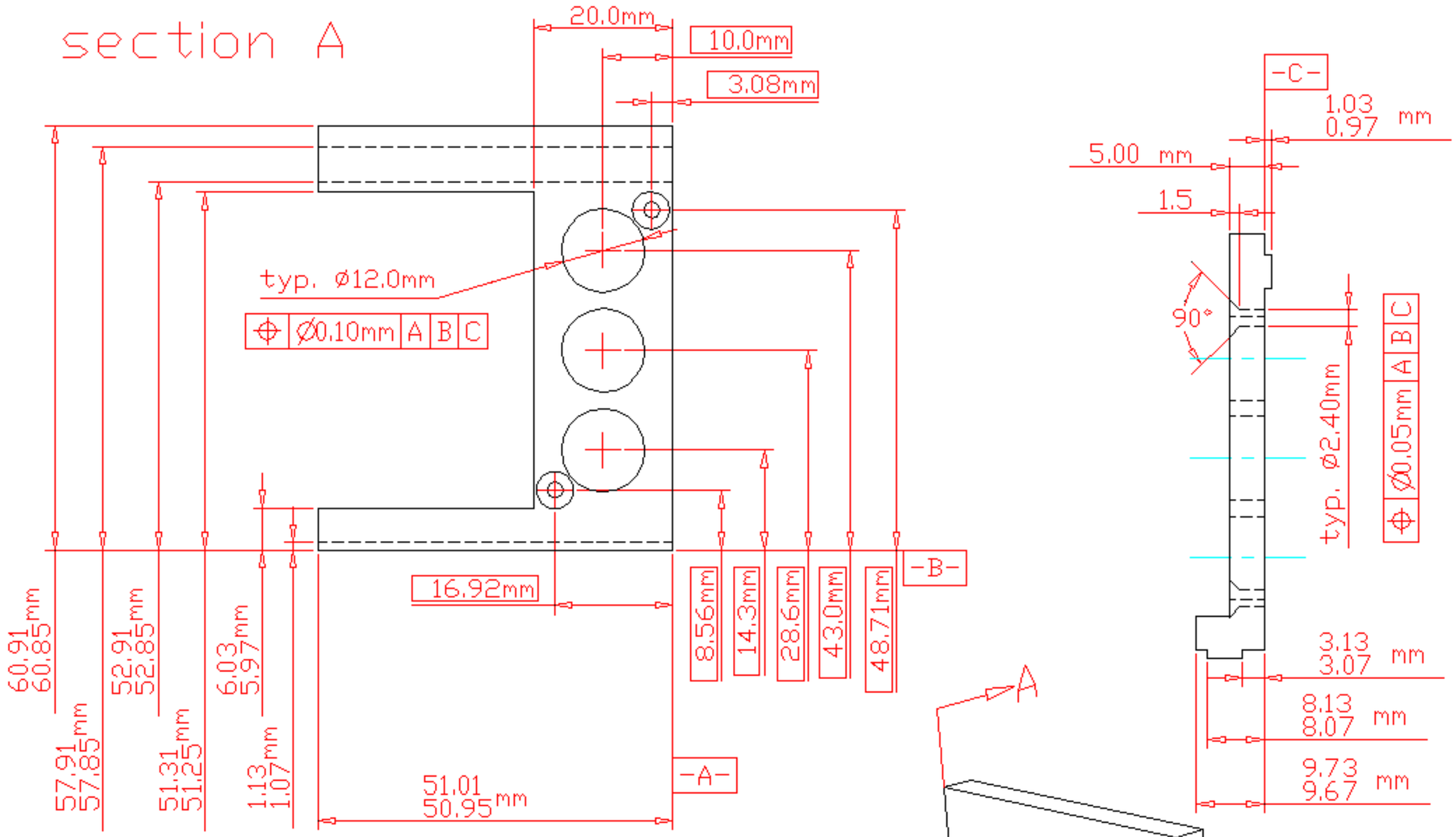

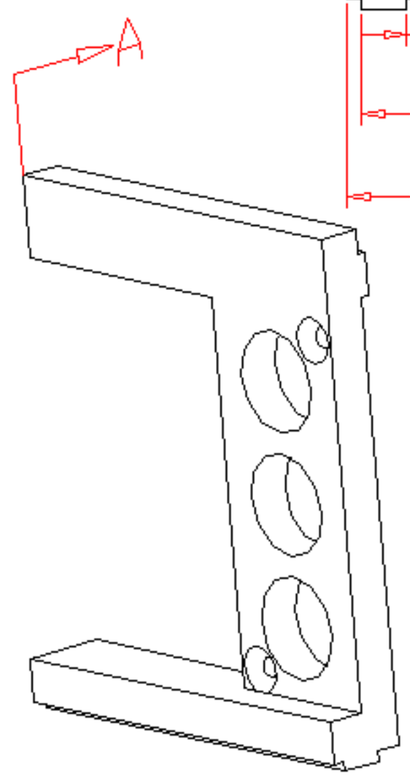

UNLESS OTHERWISE SPECIFIED: DIMENSIONS ARE IN mm [inch] TOLERANCES: DECIMALS X ± .25 mm, .X ± .13 mm, .XX ± .05 mm, .XXX ± .03 mm; ANGULAR ± 0.5° DO NOT SCALE DRAWING	Lawrence Berkeley National Laboratory		
DATE NEEDED NA	ATLAS SCT Detector Module Pickup Tool Body Front		
SURFACE TREATMENT hard anodize black	DWG NO. ag0392	REV –	REV DATE 02 Oct 01
PART / NO. REQ'D	DRAWN BY Fred Goozen		PHONE 510 486 6924
392 / 2	START DATE 02 Oct 01		FAX 510 486 7111
0 / 00	LAST CHANGED 02 Oct 01		E-MAIL FRGoozen@lbl.gov
0 / 00	MATERIAL Aluminum Tooling Plate		ACCOUNT P-1-AP-31