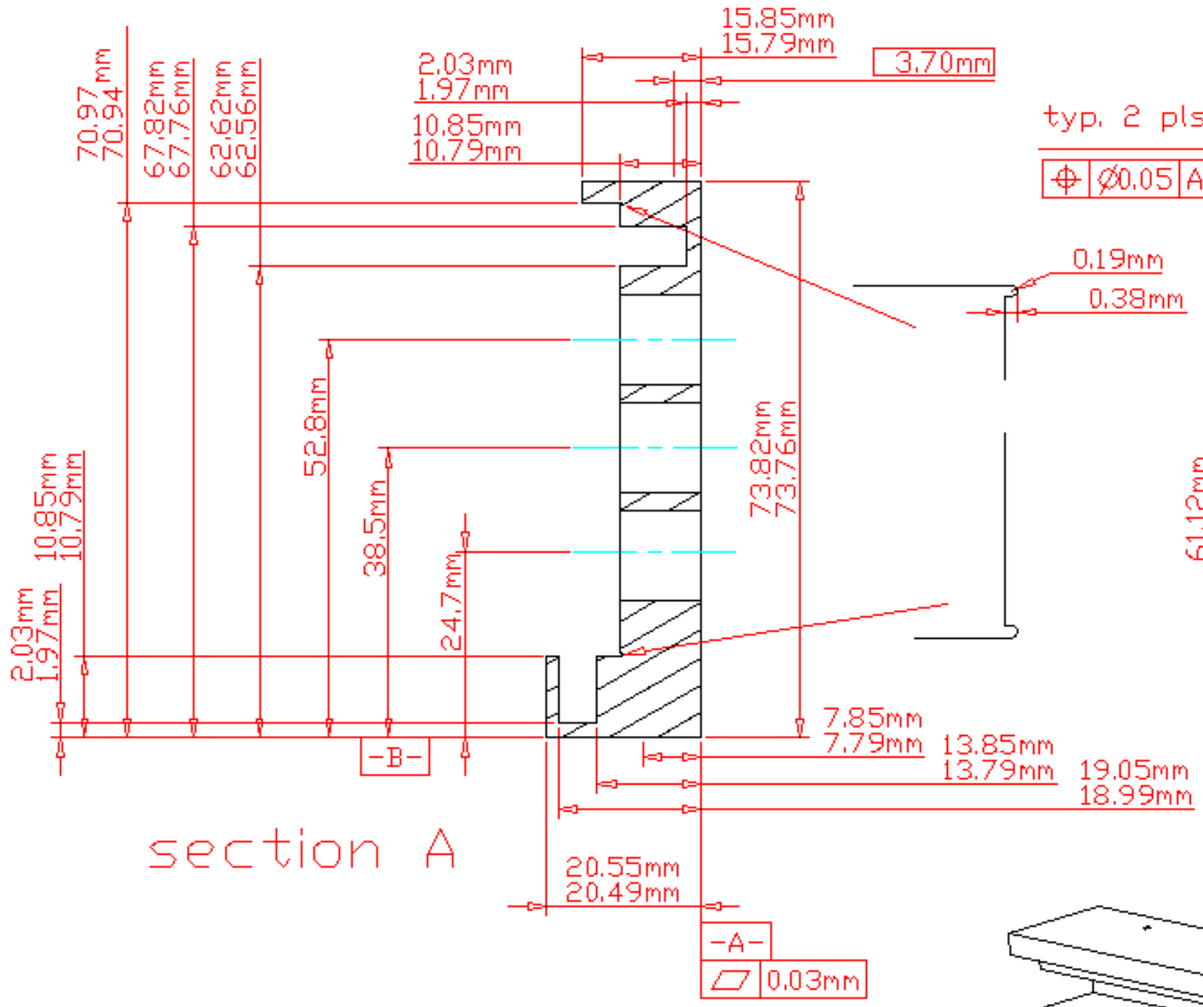

section A

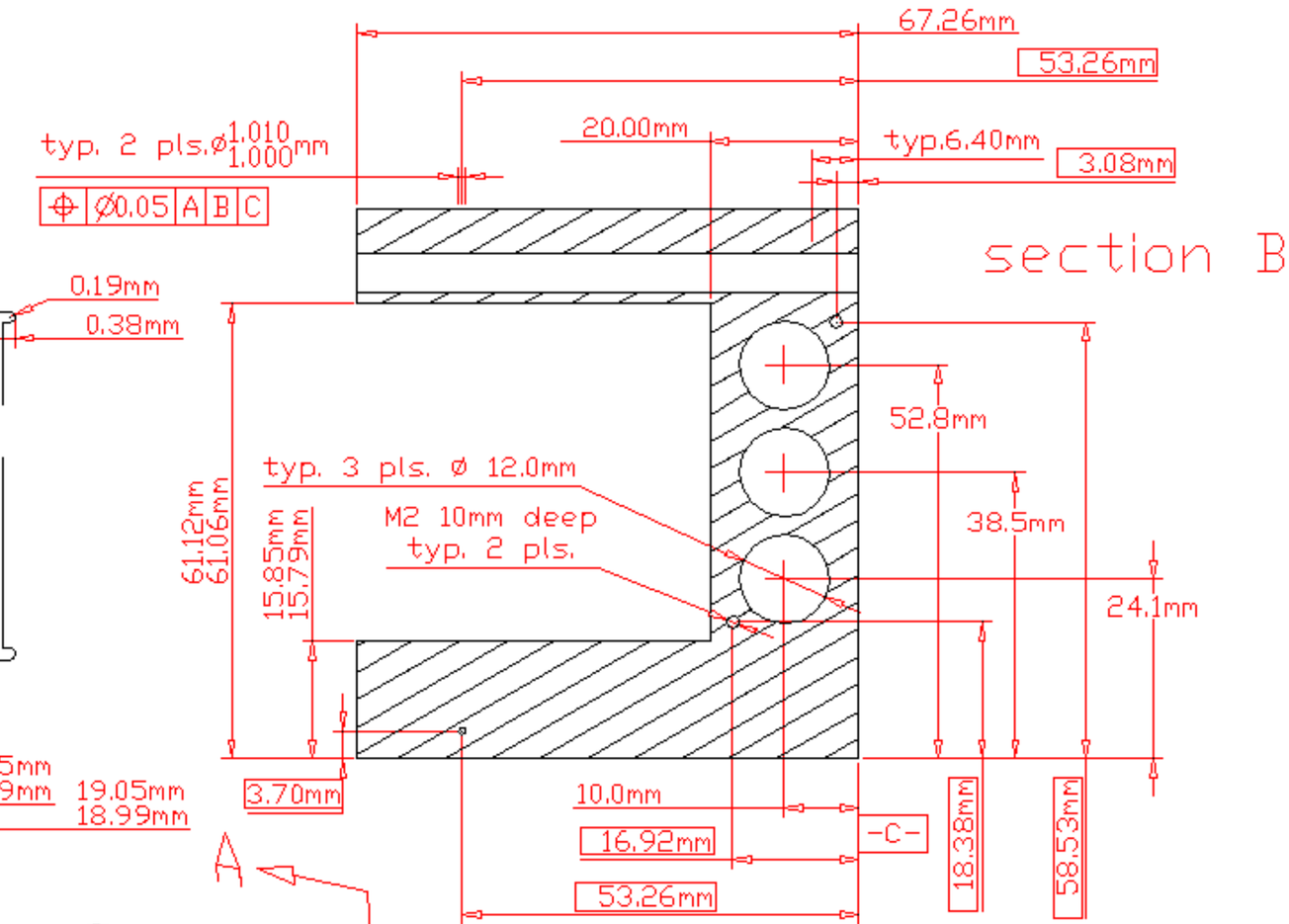

section B

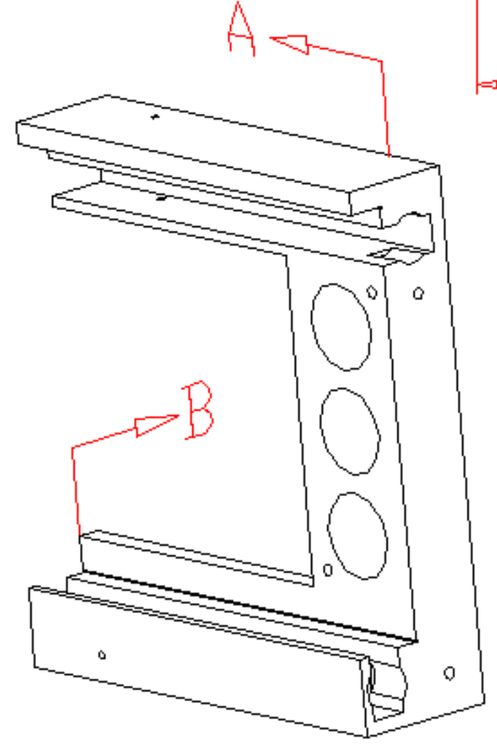

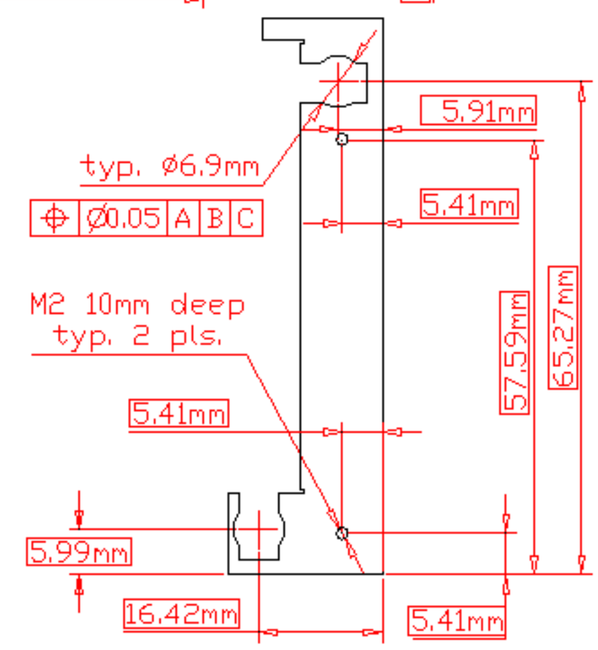

UNLESS OTHERWISE SPECIFIED DIMENSIONS ARE IN mm [inch] TOLERANCES DECIMALS .X ± .25 mm .X ± .13 mm .XX ± .03 mm .XXX ± .03 mm DO NOT SCALE DRAWING ANGULAR ± 0.5°	Lawrence Berkeley National Laboratory		
DATE NEEDED NA	ATLAS SCT Detector Module Pickup Tool Body, Back		
SURFACE TREATMENT black hard anodize	DWG NO. ag0391	REV A	REV DATE 05 Nov 01
PART 391	NO. REQ'D 2	DRAWN BY Fred Goozen	PHONE 510 486 6924
		START DATE 01 Oct 01	FAX 510 486 7111
0	00	LAST CHANGED 05 Nov 01	E-MAIL FRGoozen@lbl.gov
0	00	MATERIAL Aluminum Tooling Plate	ACCOUNT P-1-AP-31