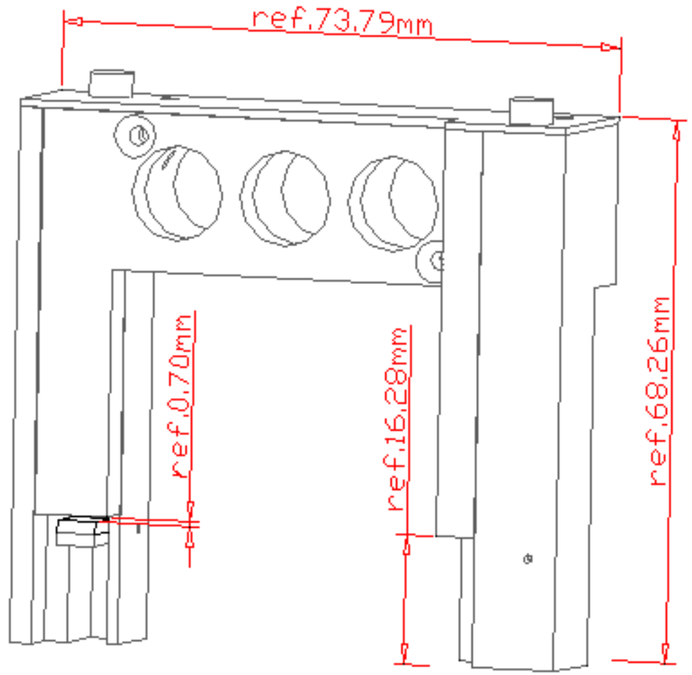

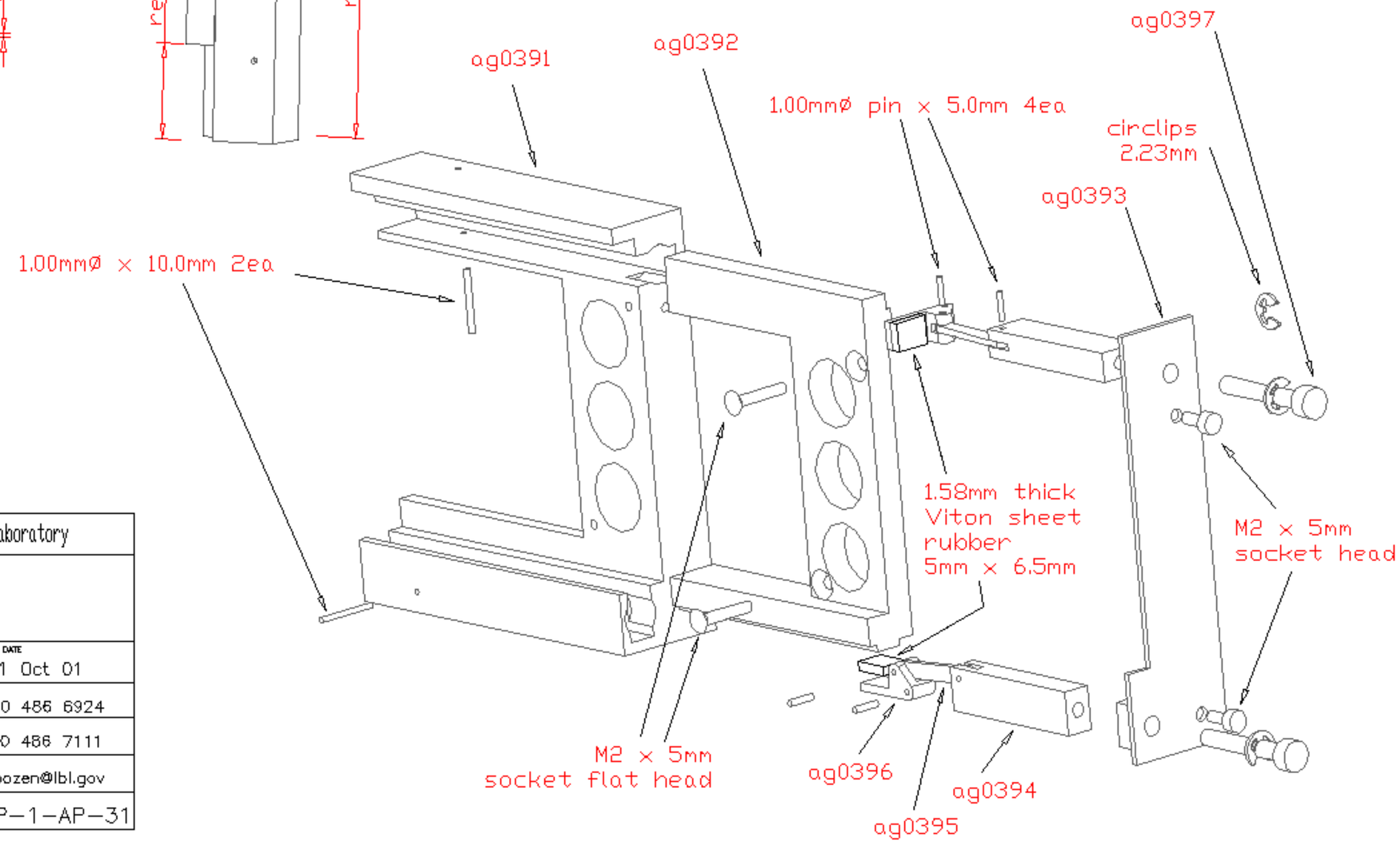

UNLESS OTHERWISE SPECIFIED: DIMENSIONS ARE IN mm [inch] TOLERANCES DECIMALS X ± .25 mm, .X ± .13 mm, .XX ± .05 mm, .XXX ± .03 mm; ANGULAR ± 0.5; DO NOT SCALE DRAWING	Lawrence Berkeley National Laboratory		
DATE NEEDED NA	ATLAS SCT Detector Module Pickup Tool Assembly		
SURFACE TREATMENT none	DWG NO. ag0389	REV –	REV DATE 01 Oct 01
PART / NO. REQ'D	DRAWN BY Fred Goozen		PHONE 510 486 6924
0 00	START DATE 01 Oct 01		FAX 510 486 7111
0 00	LAST CHANGED 01 Oct 01		E-MAIL FRGoozen@lbl.gov
0 00	MATERIAL Aluminum Tooling Plate		ACCOUNT P-1-AP-31