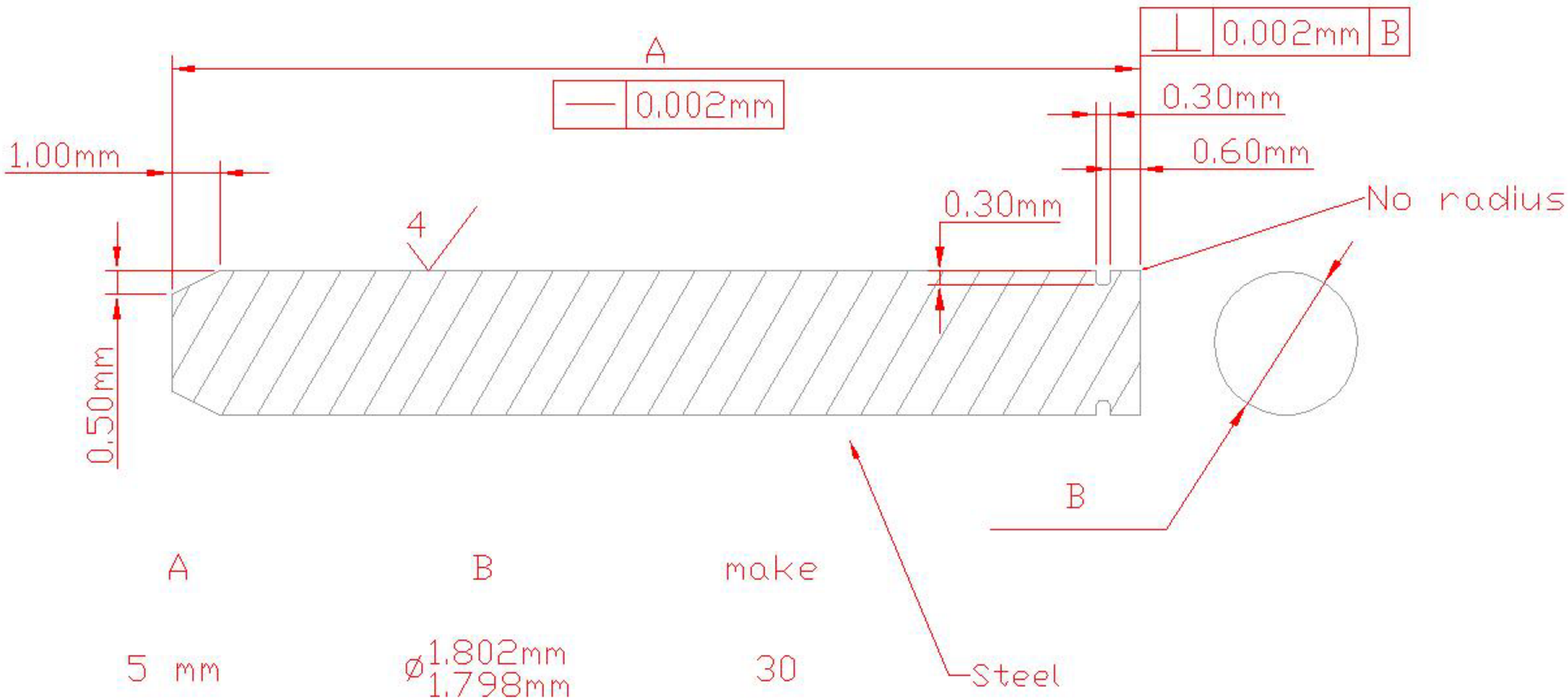

A	B	make
5 mm	ø1.802mm / 1.798mm	30
5 mm	ø1.812mm / 1.808mm	30
5 mm	ø1.822mm / 1.818mm	30
10 mm	ø1.802mm / 1.798mm	30
10 mm	ø1.812mm / 1.808mm	30
10 mm	ø1.822mm / 1.818mm	30

UNLESS OTHERWISE SPECIFIED: DIMENSIONS ARE IN mm [Inch] TOLERANCES DECIMALS X ± .25 mm .X ± .13 mm .XX ± .05 mm .XXX ± .03 mm ANGULAR ± 0.5° DO NOT SCALE DRAWING	Lawrence Berkeley National Laboratory		
DATE NEEDED NA	ATLAS, Strip Detector Module Measurement Pins		
SURFACE TREATMENT none	DWG NO. ag0371c	REV –	REV DATE 14 Aug 01
PART / NO. REQ'D	DRAWN BY Fred Goozen	PHONE 510 486 6924	
0 00	START DATE 14 Aug 01	FAX 510 486 7111	
0 00	LAST CHANGED 14 Aug 01	E-MAIL FRGoozen@lbl.gov	
0 00	MATERIAL NA	ACCOUNT P-1-AP-31	