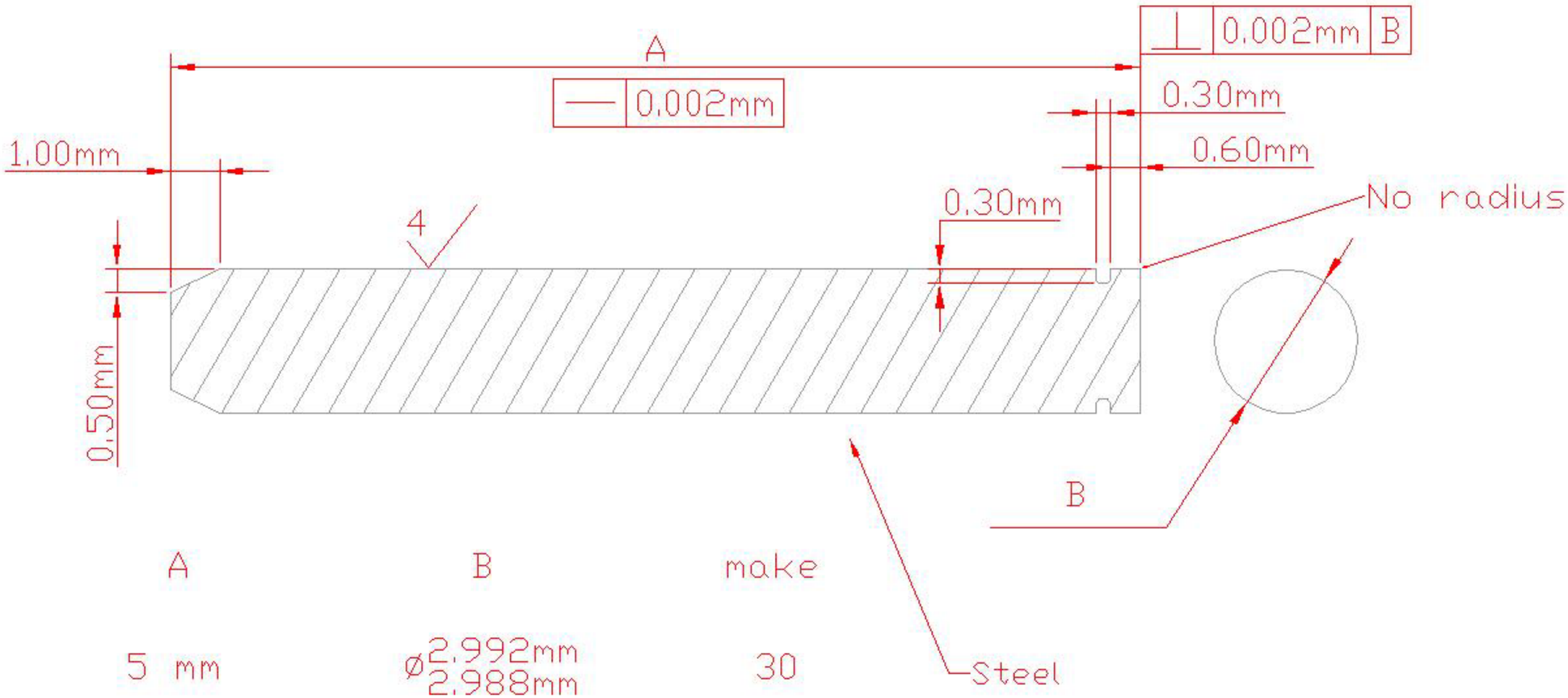

A	B	make
5 mm	ø 2.992mm / 2.988mm	30
5 mm	ø 3.002mm / 2.998mm	30
5 mm	ø 3.012mm / 3.008mm	30
10 mm	ø 2.992mm / 2.988mm	30
10 mm	ø 3.002mm / 2.998mm	30
10 mm	ø 3.012mm / 3.008mm	30

UNLESS OTHERWISE SPECIFIED:
DIMENSIONS ARE IN mm [Inch]
TOLERANCES
DECIMALS: X ± .25 mm; .X ± .13 mm; .XX ± .05 mm; .XXX ± .03 mm
ANGULAR: ± 0.5°
DO NOT SCALE DRAWING

DATE NEEDED: NA

SURFACE TREATMENT: none

PART	NO. REQ'D
0	00
0	00
0	00

Lawrence Berkeley National Laboratory

ATLAS, Pixal Detector
Sector
Measurement Pins

DWG NO.	REV	REV DATE
ag0371a	–	14 Aug 01

DRAWN BY: Fred Goozen	PHONE: 510 486 6924
START DATE: 14 Aug 01	FAX: 510 486 7111
LAST CHANGED: 14 Aug 01	E-MAIL: FRGoozen@lbl.gov
MATERIAL: NA	ACCOUNT: P-1-AP-31