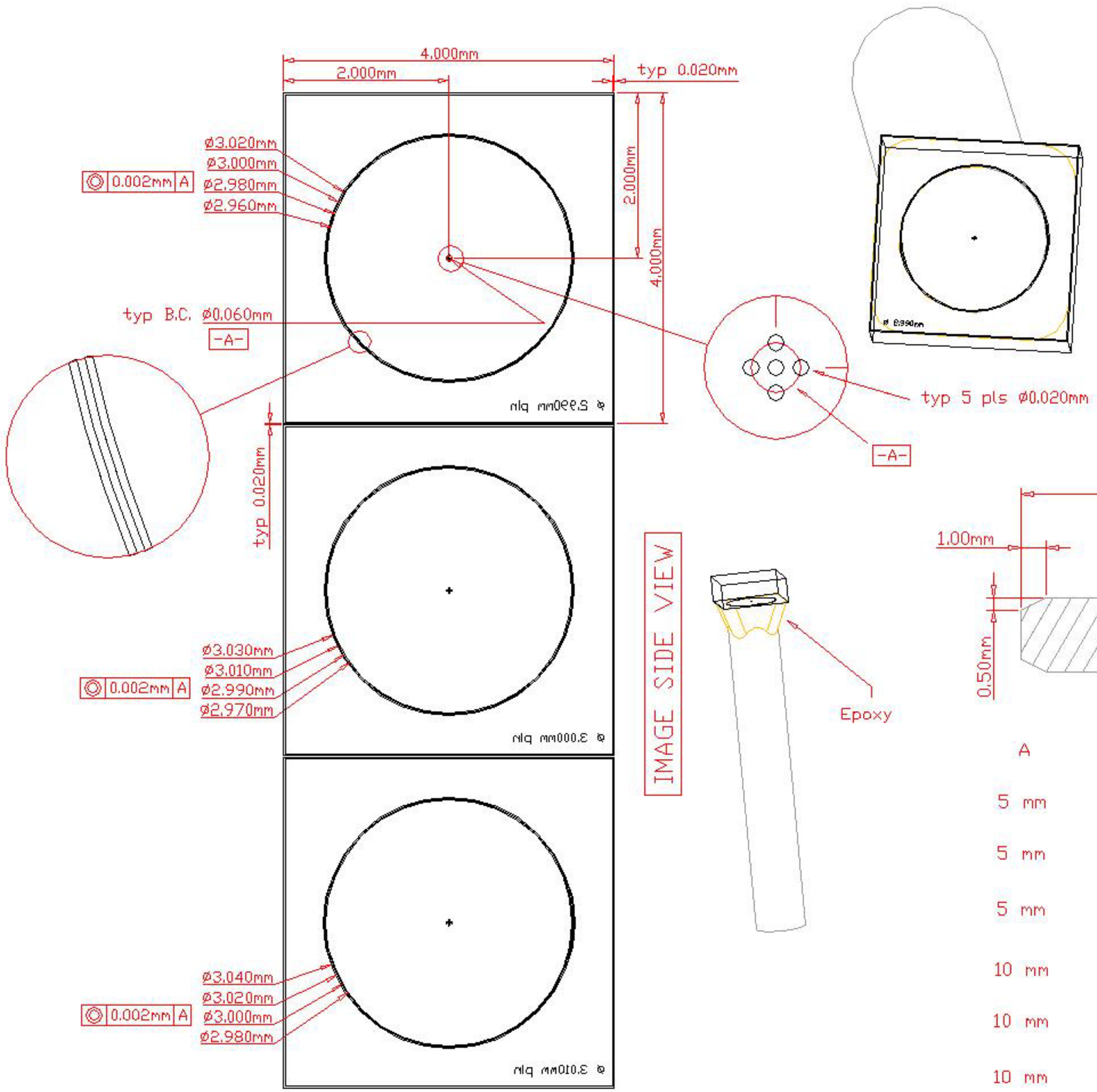

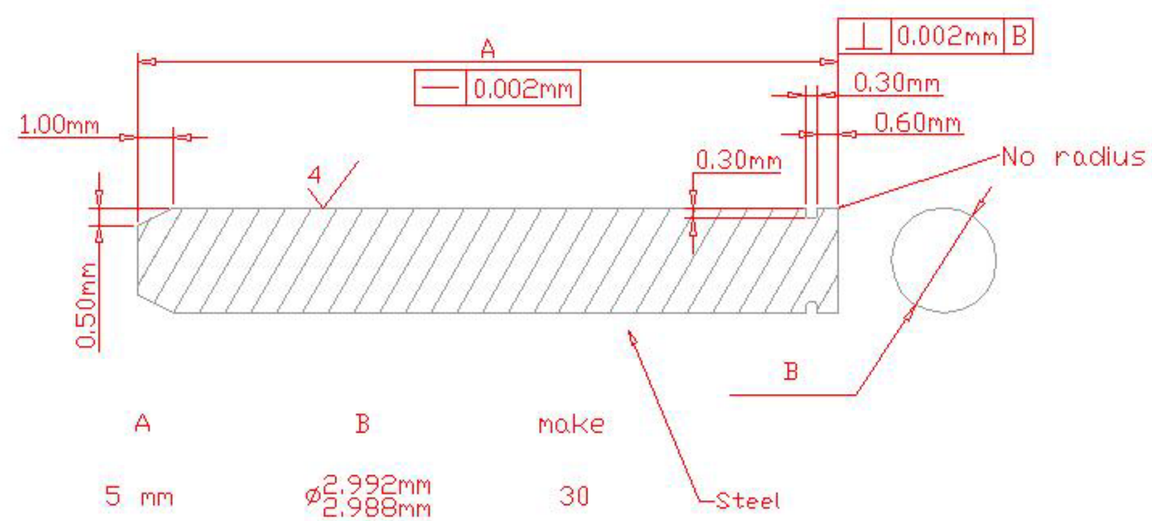

A	B	make
5 mm	Ø 2.992mm / 2.988mm	30
5 mm	Ø 3.002mm / 2.998mm	30
5 mm	Ø 3.012mm / 3.008mm	30
10 mm	Ø 2.992mm / 2.988mm	30
10 mm	Ø 3.002mm / 2.998mm	30
10 mm	Ø 3.012mm / 3.008mm	30

UNLESS OTHERWISE SPECIFIED DIMENSIONS ARE IN mm [INch]
TOLERANCES
DECIMALS ANGULAR
X ± .05 mm ± 0.5°
X ± .13 mm
XX ± .05 mm
XXX ± .03 mm
DO NOT SCALE DRAWING

DATE NEEDED NA

SURFACE TREATMENT none

PART	NO. REQ'D
0	00
0	00
0	00

Lawrence Berkeley National Laboratory

ATLAS, Pixal Detector
Sector
Measurement Pins
Assembly

DWG NO. ag0371	REV —	REV DATE 14 Aug 01
DRAWN BY Fred Goozen		PHONE 510 486 6924
START DATE 14 Aug 01		FAX 510 486 7111
LAST CHANGED 14 Aug 01		E-MAIL FRGoozen@lbl.gov
MATERIAL NA		ACCOUNT P-1-AP-31