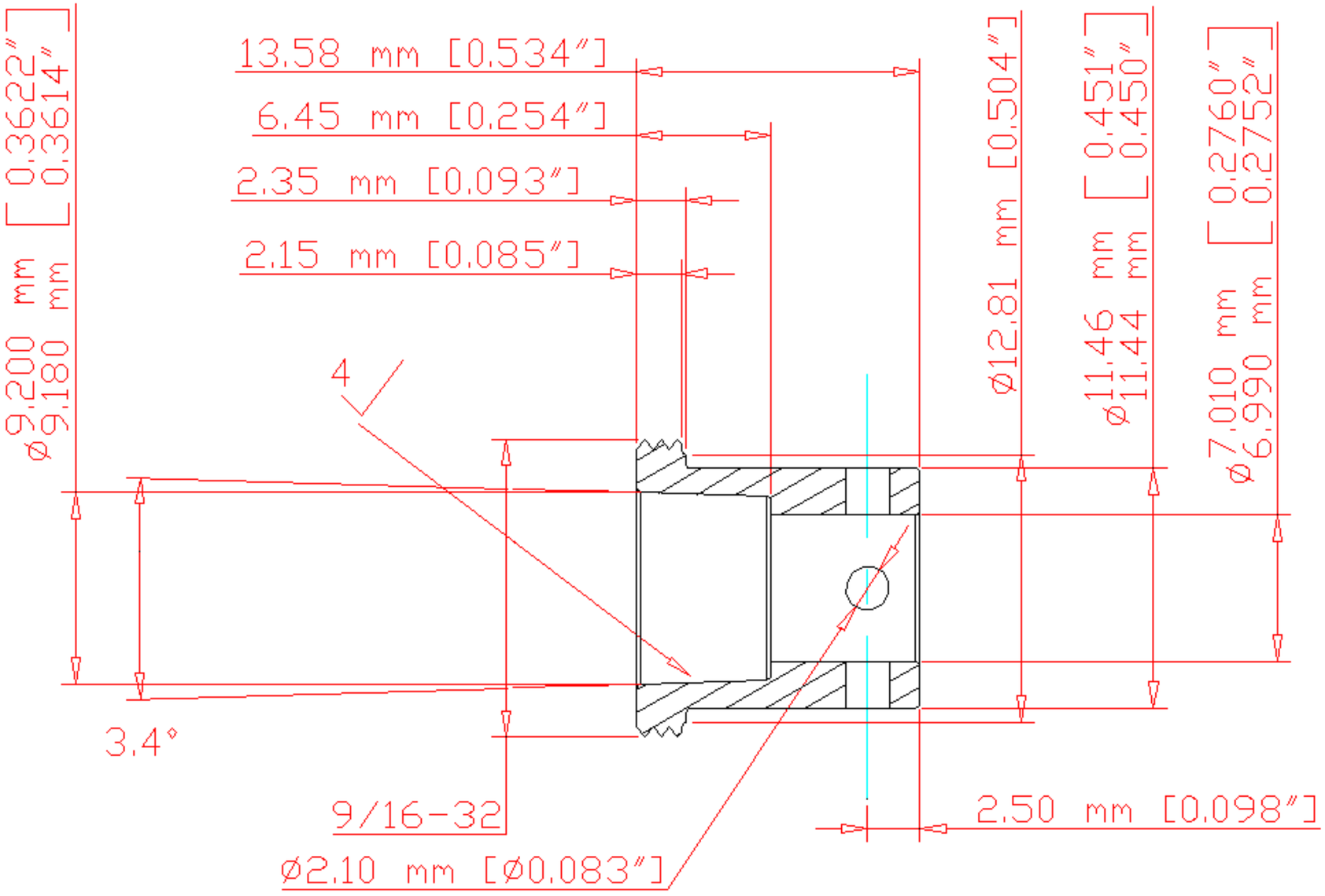

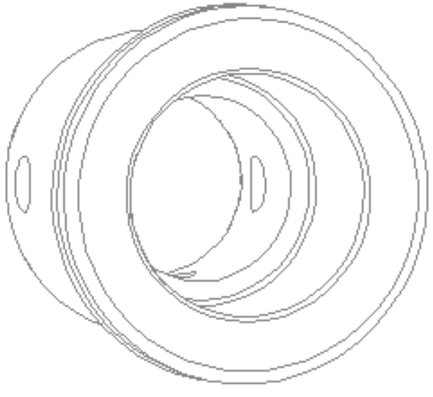

UNLESS OTHERWISE SPECIFIED: DIMENSIONS ARE IN mm [inch] TOLERANCES DECIMALS X ± .25 mm X.X ± .13 mm X.XX ± .06 mm X.XXX ± .02 mm ANGULAR ± 0.5° DO NOT SCALE DRAWING		Lawrence Berkeley National Laboratory	
DATE NEEDED NA		ATLAS, Pixel Cooling Tube Connector Luer-Lock type WELDABLE Return End	
SURFACE TREATMENT mm		DWG NO. ag03451	REV – / REV DATE 00 Mmm 97
PART	NO. REQ'D	MATERIAL	DRAWN BY Fred Goozen / PHONE 510 486 6924
1	0	6061-T6	START DATE 23 Jul 01 / FAX 510 486 7111
–	0	–	LAST CHANGED 23 Jul 01 / E-MAIL FRGoozen@lbl.gov
–	0	–	ACCOUNT P-1-AP-31