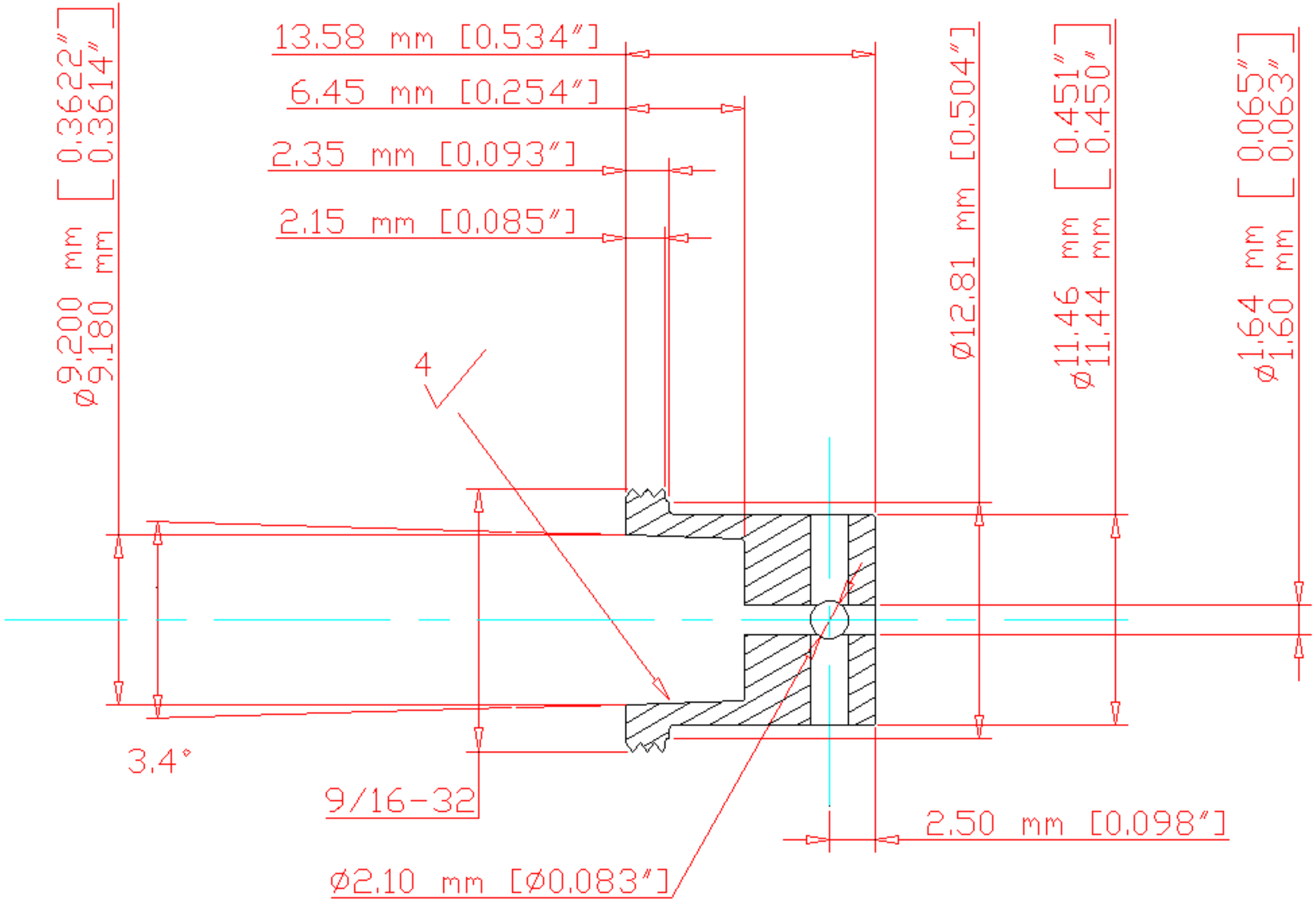

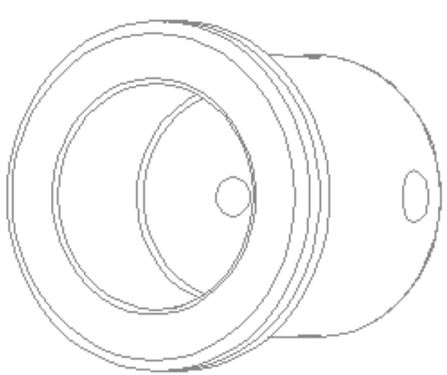

UNLESS OTHERWISE SPECIFIED: DIMENSIONS ARE IN mm [inch] TOLERANCES DECIMALS ANGULAR X ± .25 mm ± 0.5° .X ± .13 mm .XX ± .05 mm .XXX ± .03 mm DO NOT SCALE DRAWING	Lawrence Berkeley National Laboratory		
DATE NEEDED NA	ATLAS, Pixel Cooling Tube Connector Luer-Lock type WELDABLE Supply End		
SURFACE TREATMENT none	DWG NO. ag0345k	REV –	REV DATE 00 Mmm 97
PART / NO. REQ'D / MATERIAL	DRAWN BY Fred Goozen		PHONE 510 486 6924
1 / 0 / 6061-T6	START DATE 23 Jul 01		FAX 510 486 7111
– / 0 / –	LAST CHANGED 23 Jul 01		E-MAIL FRGoozen@lbl.gov
– / 0 / –			ASSIGNMENT P-1-AP-31