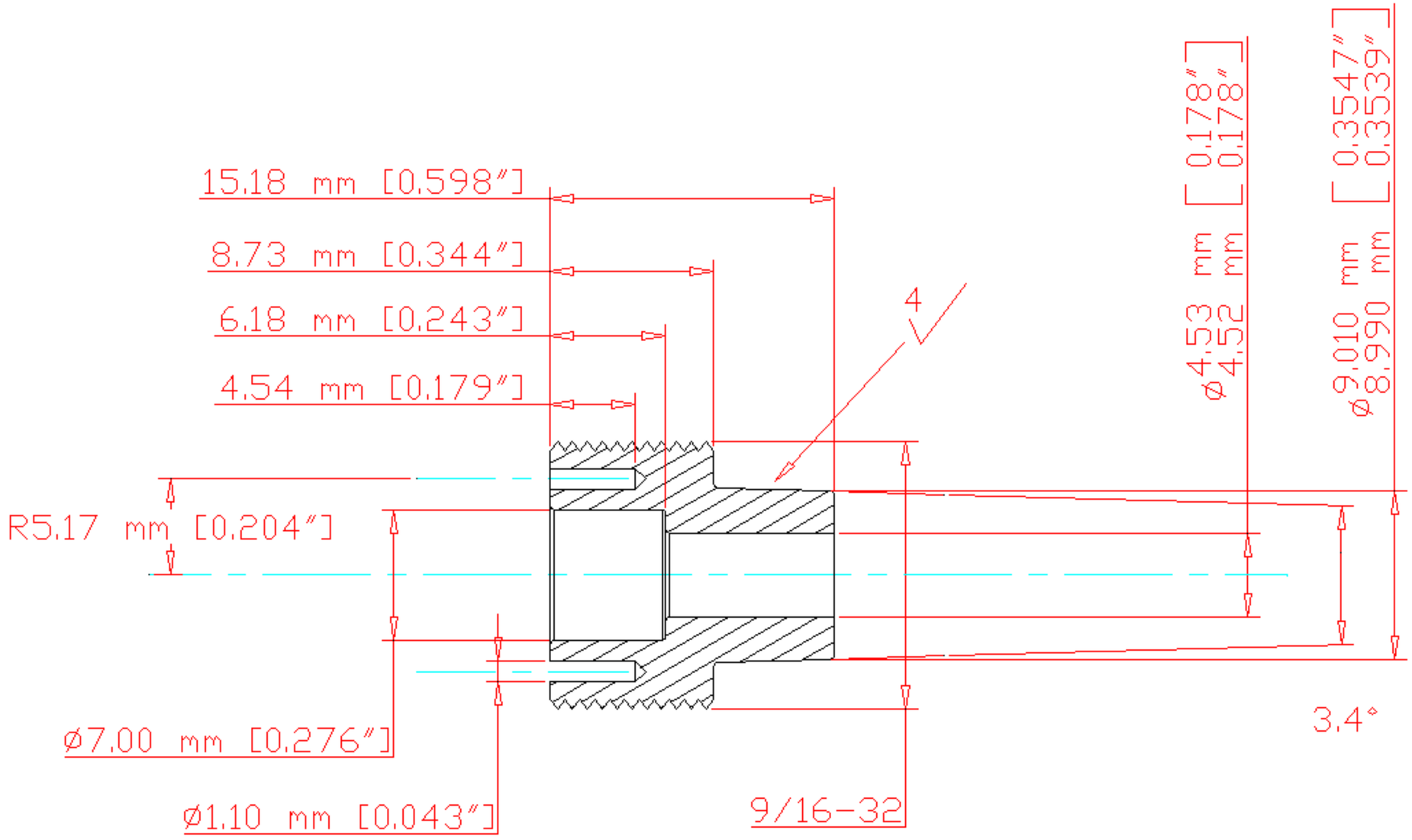

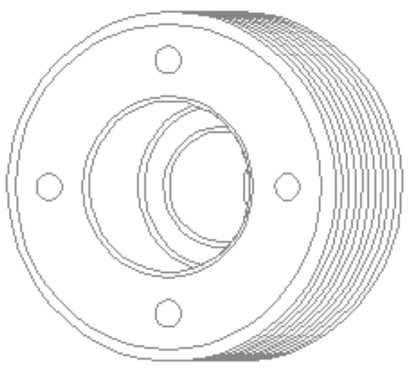

UNLESS OTHERWISE SPECIFIED DIMENSIONS ARE IN mm [inch] TOLERANCE DECIMALS X ± .25 mm X ± .13 mm XX ± .05 mm XXX ± .03 mm ANGULAR ± 0.5° DO NOT SCALE DRAWING	Lawrence Berkeley National Laboratory		
DATE REVISED NA	ATLAS, Pixel Cooling Tube Connector Luer-Lock type WELDABLE Sector End		
SURFACE TREATMENT none	DWG NO. ag03451	REV –	REV DATE 00 Mmm 97
PART / NO. REQ'D	MATERIAL	DRAWN BY Fred Goozen	PHONE 510 486 6924
1 / 0	6061-T6	START DATE 23 Jul 01	FAX 510 486 7111
– / 0	–	LAST CHANGED 23 Jul 01	E-MAIL FRGoozen@lbl.gov
– / 0	–		ACCOUNT P-1-AP-31