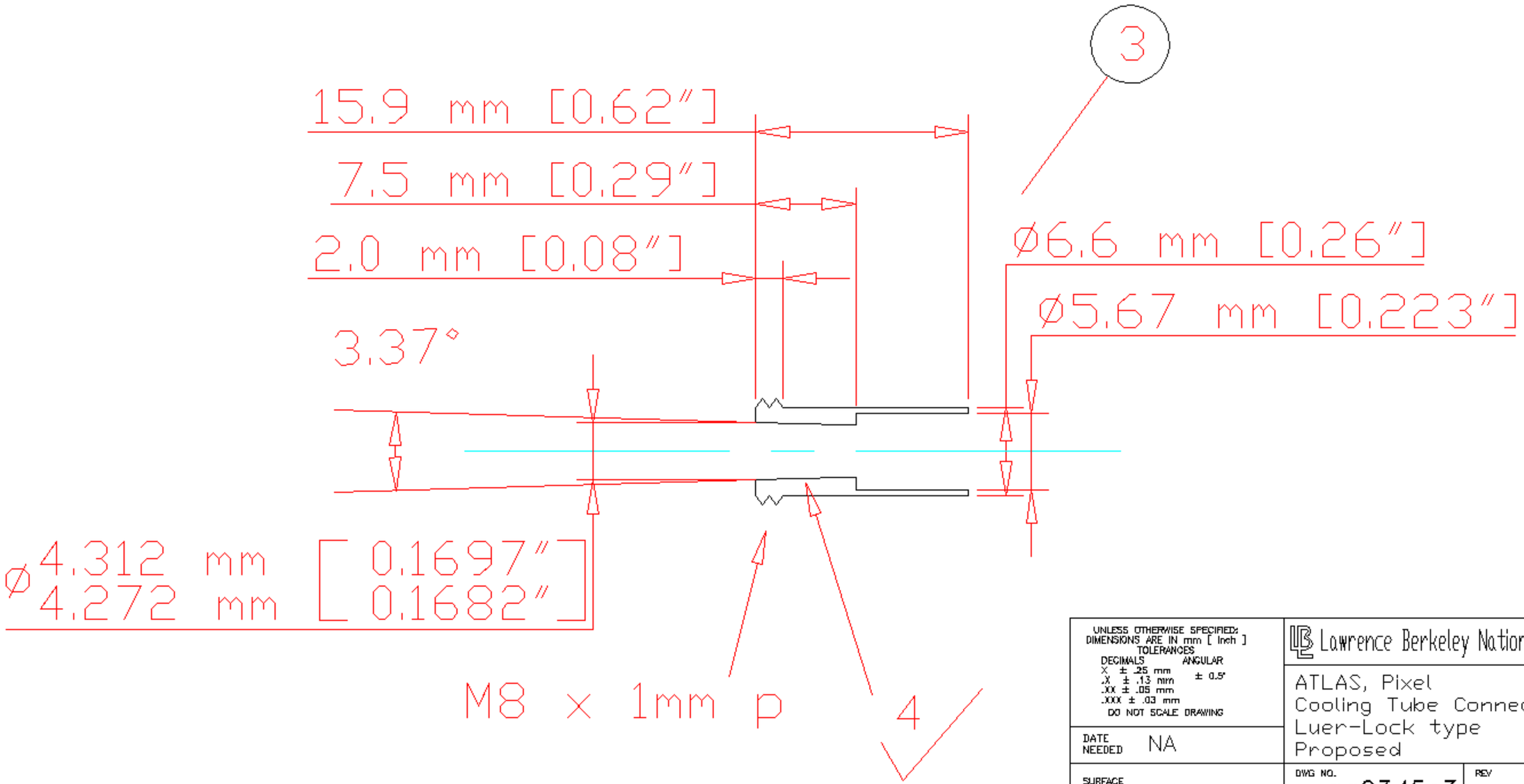

UNLESS OTHERWISE SPECIFIED: DIMENSIONS ARE IN mm [Inch] TOLERANCES DECIMALS X ± .25 mm .X ± .13 mm .XX ± .05 mm .XXX ± .03 mm ANGULAR ± 0.5° DO NOT SCALE DRAWING		Lawrence Berkeley National Laboratory	
DATE NEEDED NA		ATLAS, Pixel Cooling Tube Connector Luer-Lock type Proposed	
SURFACE TREATMENT none		DWG NO. ag0345c3	REV – / REV DATE 00 Mmm 97
PART	NO. REQ'D	DRAWN BY Fred Goozen	PHONE 510 486 6924
3	6	START DATE 6 Mar 01	FAX 510 486 7111
0	0	LAST CHANGED 2 Apr 01	E-MAIL FRGoozen@lbl.gov
0	0	MATERIAL 6061-T6	ACCOUNT P-1-AP-31