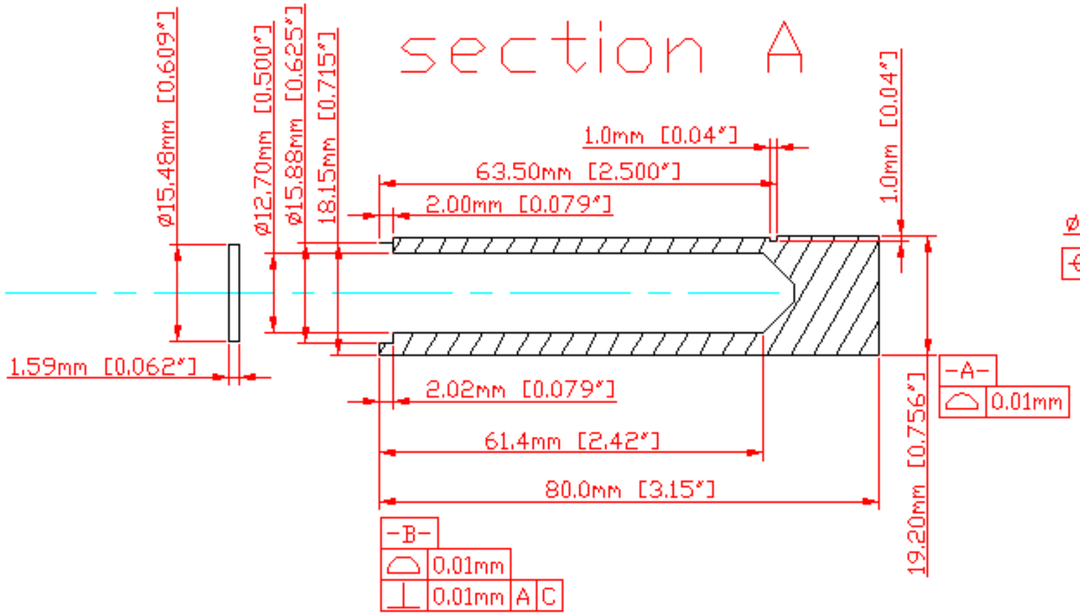

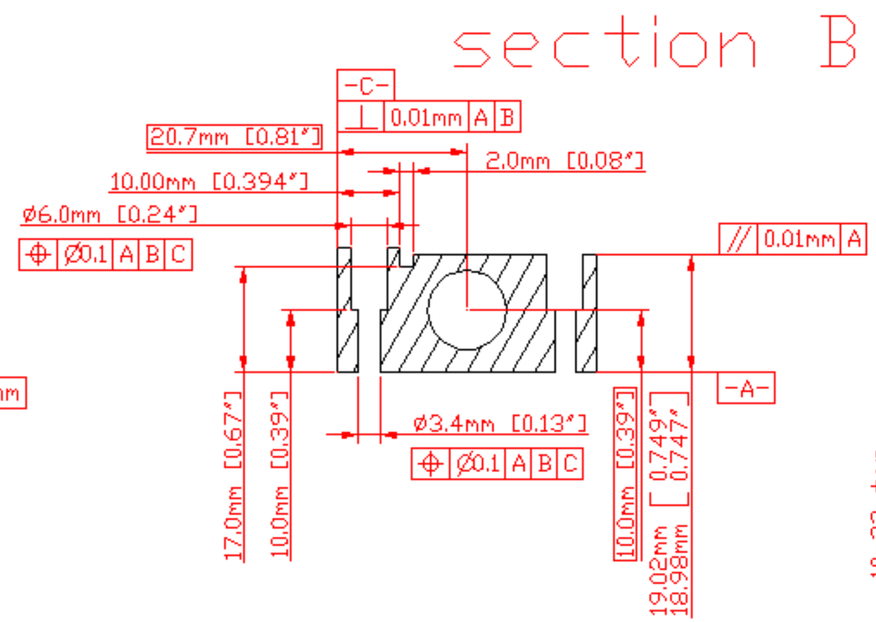

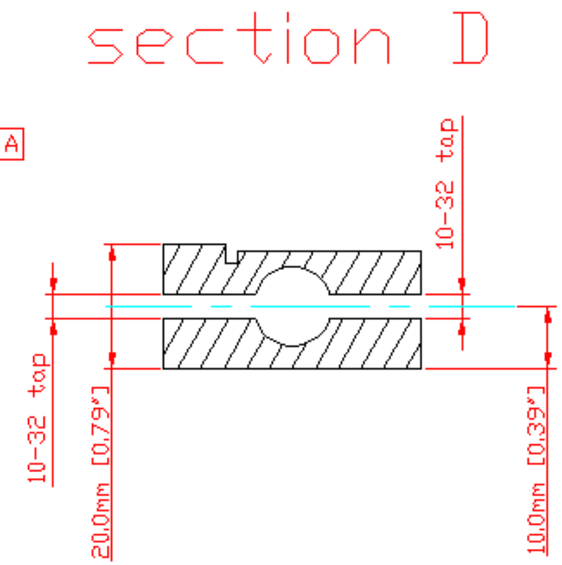

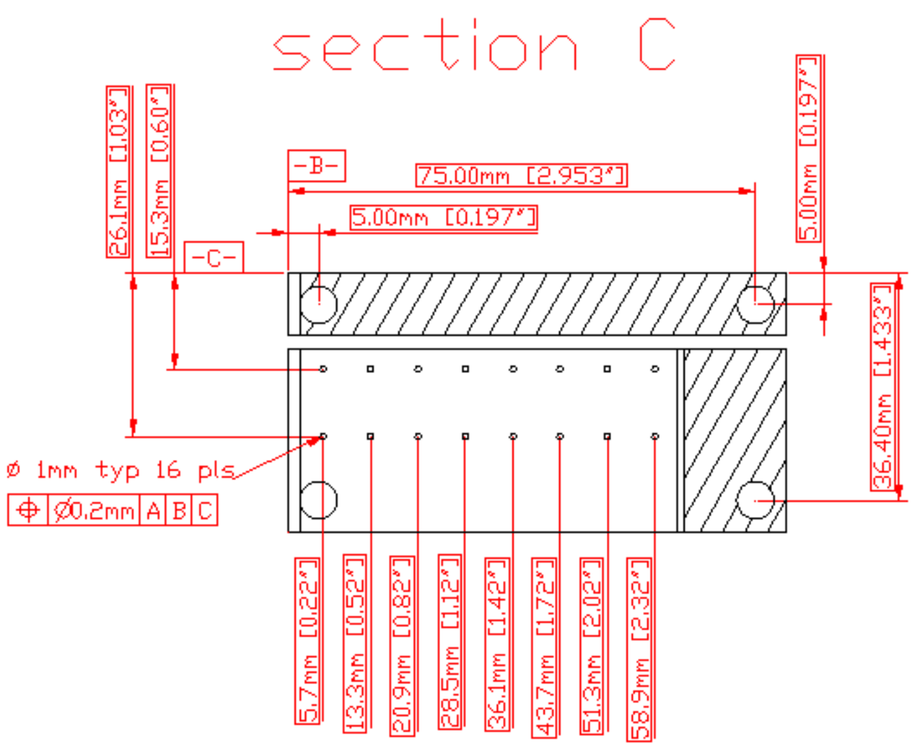

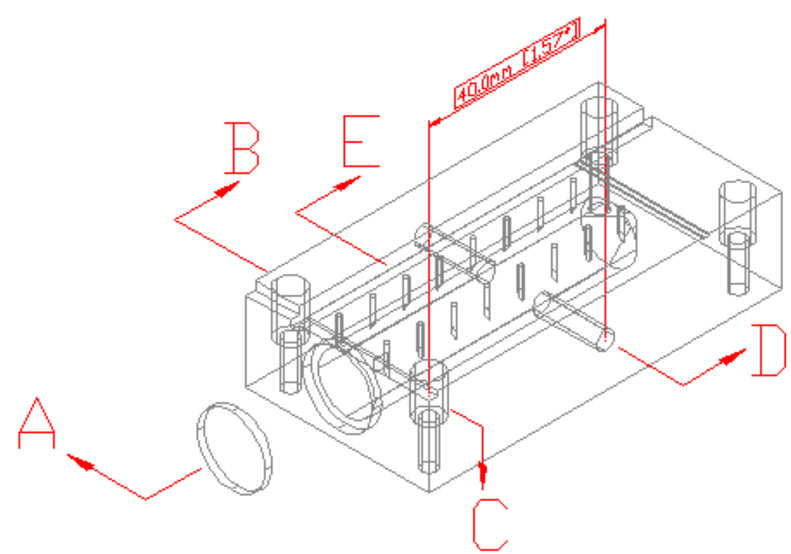

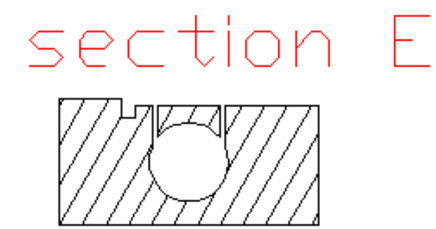

UNLESS OTHERWISE SPECIFIED: DIMENSIONS ARE IN mm [inch] TOLERANCES DECIMALS ANGULAR X ± .38 mm ± 0.5° X ± .13 mm XX ± .08 mm XXX ± .03 mm DO NOT SCALE DRAWING	Lawrence Berkeley National Laboratory		
	ATLAS, Pixel Sensor with FE chips Vacuum Chuck		
DATE NEEDED ASAP			
SURFACE TREATMENT Hard Anodize Black	DWG NO. ag0332	REV –	REV DATE 00 Mmm 97
PART / NO. REQ'D	DRAWN BY Fred Goozen		PHONE 510 486 6924
A 6	START DATE 12 Feb 01		FAX 510 486 5401
0 00	LAST CHANGED 26 Feb 01		E-MAIL FRGoozen@lbl.gov
0 00	MATERIAL Aluminum		ACCOUNT P-1-AP-31