ITEM	PART NO	REQD	DESCRIPTION	MATERIAL
2	250004		FLANGE BACKING RING	CN60/EX1515
1	250000		PST FLANGE LAYUP	CN60/EX1515

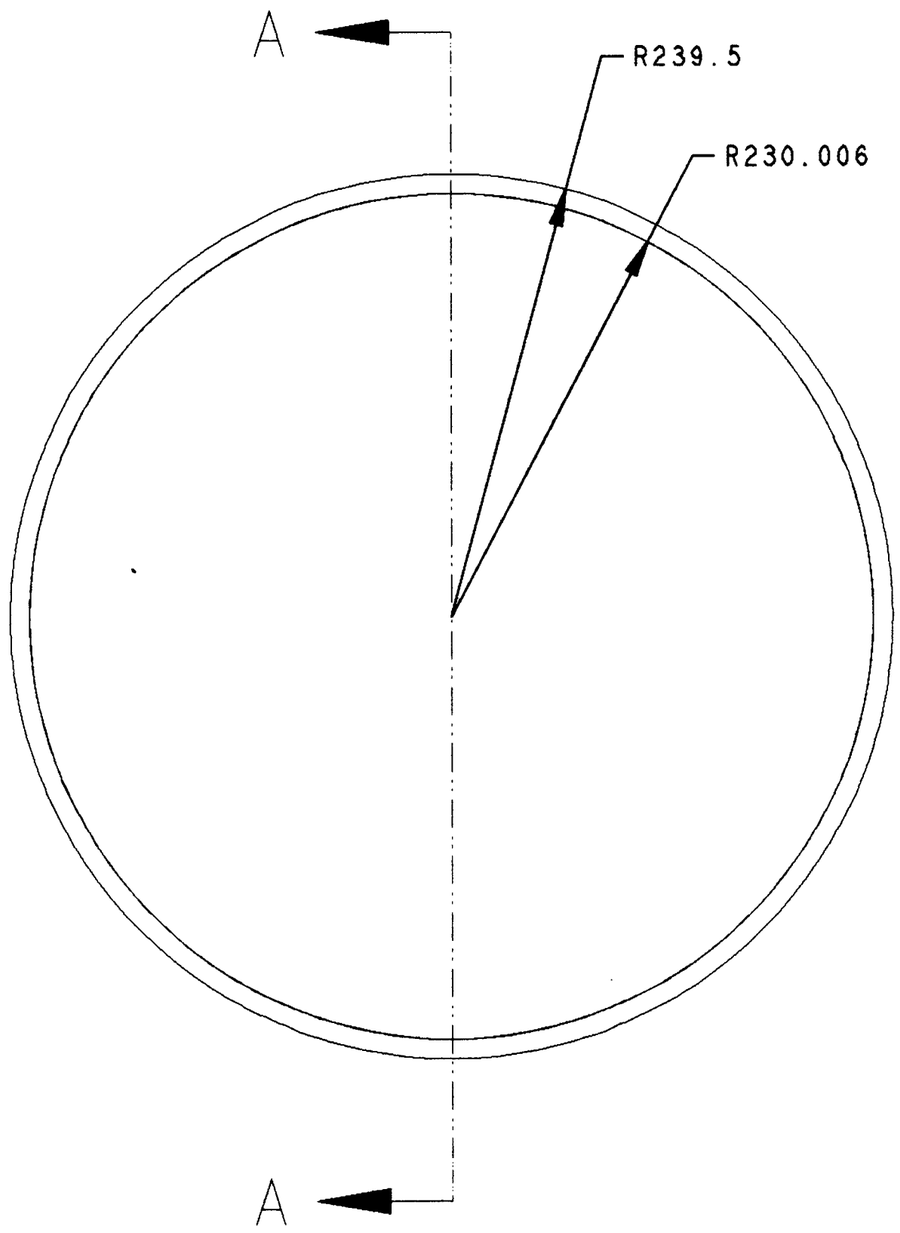

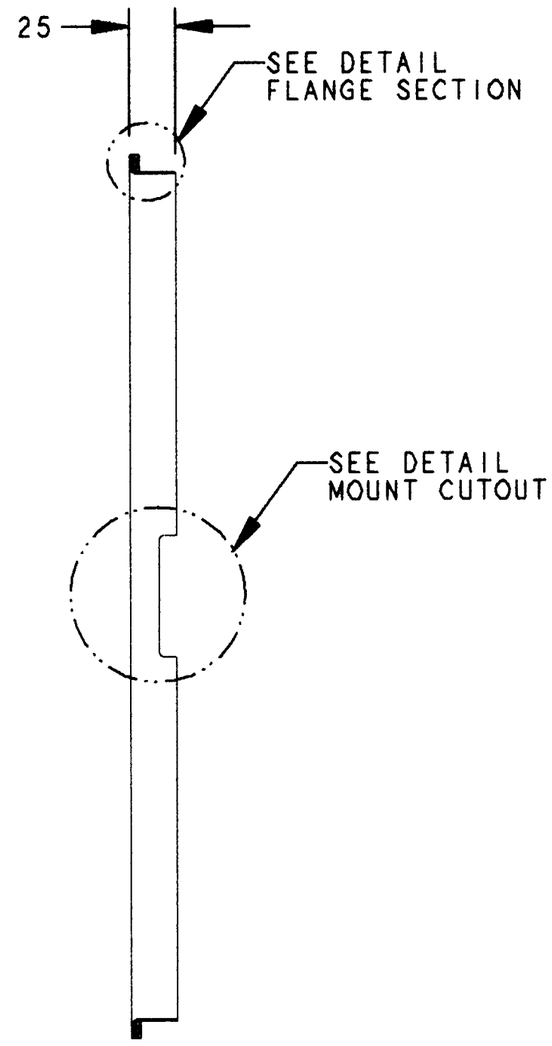

SECTION A - A

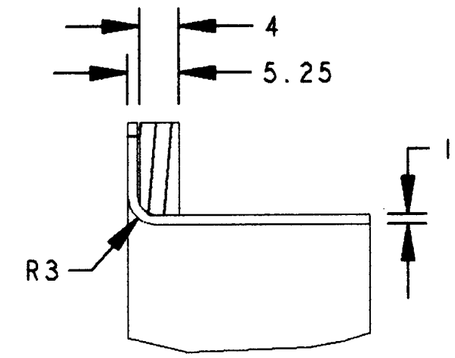

DETAIL FLANGE SECTION
SCALE 2/1

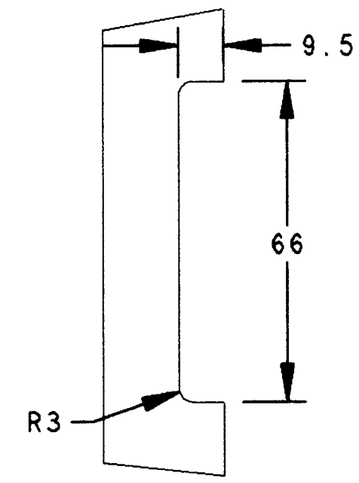

DETAIL MOUNT CUTOUT
SCALE 1/1

REV	DWG	CHK	ZONE	DATE	CHANGES

UNLESS OTHERWISE SPECIFIED

TOLERANCES		
	X.X ± 0.5	FRAC. ± 1/64
	X.XX ± 0.05	Angles ± 1.00°
	X.XXX ± 0.010	FINISH 125

DO NOT SCALE PRINT

THREADS ARE CLASS 2
CHAMFER ENDS OF ALL SCREW THREADS 30°
CUT ROUND, 1.5 THREAD RELIEF ON MACHINED THREADS
BREAK EDGES .016 MAX. ON MACHINED WORK
REMOVE BURRS, WELD SPLATTER & LOOSE SCALE
IN ACCORDANCE WITH ASME Y14.5M & B46.1

SHOP ORDERS

ACCT NO.	NO. REQD		
REL TO			
SURFACE TREATMT			
IDENT METHOD	TAG		
PROJECT NUMBER			
PROJECT NAME			
DWG BY	N HARTMAN	DATE	07-Nov-02
CHK BY		DATE	
APR BY	N HARTMAN	DATE	

REF NO.	-
DATE ISSD	-
DATE REQD	-

ERNEST ORLANDO LAWRENCE BERKELEY NATIONAL LABORATORY
UNIVERSITY OF CALIFORNIA - BERKELEY

ATLAS PIXEL DETECTOR
PIXEL SUPPORT TUBE
PPI FLANGE ASSEMBLY

MICROFILMED:	DWG. TYPE	SHOWN ON	SCALE: 19/50	DO NOT SCALE PRINTS
	ASSEM		SHEET 1 OF 1	
PATENT CLEAR:	DESIGN ACCT. NO.	CATEGORY CODE AP6300	DWG. NO. 2500053	SIZE / REV. 1

DWG. NO. 2500053 SIZE REV. SH. 1 1